AUSTRALIAN PRODUCT INFORMATION – XOLAIR® (OMALIZUMAB) SOLUTION FOR INJECTION AND POWDER FOR SOLUTION FOR INJECTION

1 NAME OF THE MEDICINE

Omalizumab (rch)

2 QUALITATIVE AND QUANTITATIVE COMPOSITION

Omalizumab is a recombinant DNA-derived humanised monoclonal antibody produced in Chinese hamster ovary cells that selectively binds to human immunoglobulin E (IgE).

Solution for injection in pre-filled syringe

Each pre-filled syringe of 0.5 mL contains 75 mg of omalizumab.

Each pre-filled syringe of 1 mL contains 150 mg of omalizumab.

Solution for injection in pre-filled syringe, with new safety device

Each pre-filled syringe of 0.5 mL contains 75 mg of omalizumab.

Each pre-filled syringe of 1 mL contains 150 mg of omalizumab.

Each pre-filled syringe of 2 mL contains 300 mg of omalizumab.

Solution for injection in pre-filled pen

Each pre-filled syringe of 0.5 mL contains 75 mg of omalizumab.

Each pre-filled syringe of 1 mL contains 150 mg of omalizumab.

Each pre-filled syringe of 2 mL contains 300 mg of omalizumab.

Powder for injection vial with diluent for solution for injection

One vial of Xolair® 75 mg powder for injection contains 75mg of omalizumab. A reconstituted single use vial delivers 75 mg omalizumab per 0.6 mL (125 mg/mL).

One vial of Xolair® 150 mg powder for injection contains 150 mg of omalizumab. A reconstituted single use vial delivers 150mg omalizumab per 1.2 mL (125 mg/mL).

For the full list of excipients, see Section 6.1 List of excipients.

3 PHARMACEUTICAL FORM

Solution for injection in pre-filled syringe and pre-filled pen

Clear to slightly opalescent, colourless to pale brownish-yellow preservative free solution in a pre-filled syringe or pre-filled pen.

Powder for injection vial with diluent

Xolair is a sterile, white, preservative free lyophilised powder that is reconstituted with water for injections and administered as a subcutaneous (SC) injection.

Powder: white to off-white lyophilizate in a glass vial.

Diluent: clear and colourless solution in a glass ampoule.

4 CLINICAL PARTICULARS

4.1 THERAPEUTIC INDICATIONS

Allergic Asthma

Children 6 to < 12 years of age

In children aged 6 to <12 years, Xolair is indicated as add-on therapy to improve asthma control in patients with severe allergic asthma who have documented exacerbations despite daily high dose inhaled corticosteroids, and who have immunoglobulin E levels corresponding to the recommended dose range (see Table 1 in Section 4.2 DOSE AND METHOD OF ADMINISTRATION).

Adults and adolescents ≥ 12 years of age

Xolair is indicated for the management of adult and adolescent patients with moderate to severe allergic asthma, who are already being treated with inhaled steroids, and who have serum immunoglobulin E levels corresponding to the recommended dose range (see Table 1 in Section 4.2 DOSE AND METHOD OF ADMINISTRATION).

Chronic rhinosinusitis with nasal polyps (CRSwNP)

Xolair is indicated as add-on treatment in adult patients (18 years of age and above) for the treatment of severe CRSwNP with inadequate response to intranasal corticosteroids. Recommended dosing is determined by serum immunoglobulin E levels and body weight corresponding to the recommended dose range in the Product Information (see Section 4.2 DOSE AND METHOD OF ADMINISTRATION) .

Chronic Spontaneous Urticaria (CSU)

Xolair is indicated for adults and adolescents (12 years of age and above) with chronic spontaneous urticaria who remain symptomatic despite H1 antihistamine treatment.

4.2 DOSE AND METHOD OF ADMINISTRATION

Product is for single use in one patient only. Discard any residue.

<u>Dosing Principles for Allergic Asthma and CRSwNP</u>

Xolair treatment for chronic rhinosinusitis with nasal polyps (CRSwNP) should be initiated by specialists experienced in the diagnosis and treatment of CRSwNP.

Dosing for asthma and CRSwNP follows the same dosing principles. The appropriate dose and dosing frequency of Xolair for these conditions is determined by baseline immunoglobulin E (IgE) (IU/mL), measured before the start of treatment, and body weight (kg). Prior to initial dosing, patients should have their IgE level determined by any commercial serum total IgE assay for their dose assignment.

Based on these measurements 75 to 600 mg of Xolair in 1 to 4 injections may be needed for each administration. See Table 1 for dose determination in allergic asthma and CRSwNP and Tables 2 and 3 for a dose conversion charts.

Measurement of serum IgE levels

Any commercial serum total IgE assay may be used for determination of serum total IgE for initial dose assignment. However, Xolair can interfere with accurate quantitation of serum IgE levels. The total IgE levels while on active treatment of Xolair increased an average of 4-fold post-dose as a result of omalizumab-IgE binding. If it is necessary to measure serum total IgE in subjects currently on Xolair treatment or who have discontinued within the last 12 months, the Abbott IMX assay has been shown to demonstrate reliable serum total IgE measurements.

Treatment duration, monitoring and dose adjustments

Doses do not need to be adjusted for variations in serum IgE over time. Data from clinical studies suggest that, in the absence of omalizumab treatment, there is no significant temporal variation in serum total IgE levels.

Xolair is intended for long-term treatment. In treatment for allergic asthma, at least 16 weeks of treatment is required to adequately assess whether or not a patient is responding to Xolair. The decision to continue Xolair should be based on whether a marked improvement in overall asthma control is seen (see Section 5.1 PHARMACODYNAMIC PROPERTIES - CLINICAL TRIALS).

Discontinuation of Xolair treatment generally results in a return to elevated free IgE levels and associated symptoms. Total IgE levels are elevated during treatment and remain elevated for up to one year after the discontinuation of treatment. Therefore, re-testing of IgE levels during Xolair treatment cannot be used as a guide for dose determination. Dose determination after treatment interruptions lasting less than one year should be based on serum IgE levels obtained at the initial dose determination. Total serum IgE levels may be re-tested for dose determination if treatment with Xolair has been interrupted for one year or more.

Doses should be adjusted for significant changes in body weight (see Table 1). No data are currently available to support dose adjustments based on changes in serum total IgE with increasing age.

Reduction of inhaled corticosteroids may be attempted after 16 weeks of treatment with Xolair in patients with stable, well-controlled asthma. The dose of corticosteroid should be reduced gradually under medical supervision. In some patients, inhaled corticosteroids can be tapered off completely. Xolair should not be abruptly substituted for inhaled corticosteroids.

In clinical trials for CRSwNP, changes in CRSwNP score (NPS) and nasal congestion score (NCS) were observed as early as the first assessment at 4 weeks. The need for continued therapy should be periodically reassessed based upon the patient's disease severity and level of symptom control.

<u>Dosage for Allergic Asthma and CRSwNP</u>

Xolair is administered subcutaneously every two or four weeks according to the dose determination chart below (Table 1). Doses (mg) and dosing frequency are determined by baseline serum total IgE level (IU/mL), measured before the start of treatment, and body weight (kg).

Table 1: Xolair doses for patients 6 years and older with allergic asthma and for patients 18 years and older with CRSwNP, subcutaneous administration.

Baseline IgE (IU/mL)	Total milligrams of Xolair required per 4-week interval Body Weight (kg)									
	>20–25*	**>25-30***	**>30–40**	**>40–50**	**>50-60**	**>60–70**	**>70–80**	**>80–90**	**>90–125**	**>125-150**
>30–100	75	75	75	150	150	150	150	150	300	300
>100–200	150	150	150	300	300	300	300	300	450	600
>200–300	150	150	225	300	300	450	450	450	600	750
>300–400	225	225	300	450	450	450	600	600		
>400–500	225	300	450	450	600	600	750	750		
>500–600	300	300	450	600	600	750				
>600–700	300	450	450	600	750					
>700–800	450	450	600	750						
>800–900	450	450	600	750						
>900–1000	450	600	750							
>1000–1100	450	600	750							
>1100–1200	600	600								
>1200–1300	600	750								

Notes:
Doses above black line are administered once per 4 weeks.
Doses below black line are split into 2 equal doses administered every 2 weeks (i.e. 450 total = 225 every 2 weeks; 600 mg total = 300 mg every 2 weeks; 750 total = 375 every 2 weeks).

*Body weights below 30 kg were not studied in the pivotal trials for CRSwNP.

There is limited data in patients whose baseline IgE levels or body weight in kg are outside the limits of the dosing tables. Doses greater than 750 mg were not studied in allergic asthma in the pivotal clinical studies and are not recommended. There is limited data on doses greater than 750 mg from the pivotal studies in CRSwNP and therefore higher doses are not recommended.

Patients with severe asthma and a baseline IgE lower than 76 IU/mL were less likely to experience benefit (see Section 5.1 PHARMACODYNAMIC PROPERTIES - CLINICAL TRIALS). Prescribing physicians should ensure that adult and adolescent patients with IgE below 76 IU/ml and children (6 to < 12 years of age) with IgE below 200 IU/ml have unequivocal in vitro reactivity (RAST) to a perennial allergen before starting therapy.

The prescribing of Xolair in children with asthma should be done in conjunction with a paediatrician, respiratory physician or immunologist.

Table 2: Conversion from dose to number of pre-filled syringes/pens*, number of injections and total injection volume for each administration**

Dose (mg)	Number of syringes/pens*			Number of injections	Total injection volume (mL)
	75 mg	150 mg	300 mg		
75	1	0	0	1	0.5
150	0	1	0	1	1.0
225	1	1	0	2	1.5
300	0	0	1	1	2.0
375	1	0	1	2	2.5
450	0	1	1	2	3.0
525	1	1	1	3	3.5
600	0	0	2	2	4.0

*Xolair 300 mg pre-filled syringe and all dose strengths of Xolair pre-filled pen are not intended for use in patients <12 years of age.
**This table represents the least number of injections for the patients, however there are other syringe/pen dosing combinations possible to achieve the desired dose.

Table 3: Conversion from dose to number of vials, number of injections and total injection volume for each administration

Dose (mg)	Number of vials		Number of injections	Total volume injected (mL)[a]
	75 mg	150 mg		
75	1	0	1	0.6
150	0	1	1	1.2
225	1	1	2	1.8
300	0	2	2	2.4
375	1	2	3	3.0
450	0	3	3	3.6
525	1	3	4	4.2
600	0	4	4	4.8

1.2 mL = maximum volume delivered per vial.

Dosage for Chronic Spontaneous Urticaria (CSU)

The recommended dose is 300 mg by subcutaneous injection every four weeks. Some patients may achieve control of their symptoms with a dose of 150 mg every four weeks.

Prescribers are advised to periodically reassess the need for continued therapy.

Clinical trial experience of long-term treatment beyond 6 months in this indication is limited.

Xolair should be used as add-on therapy to H1 antihistamine treatment.

Method of administration

For subcutaneous administration only. Xolair must not be administered by the intravenous or intramuscular route.

Pre-filled syringe and pre-filled pen solution for injection

Xolair 300 mg pre-filled syringe and all dose strengths of Xolair pre-filled pen are not intended for use in patients <12 years of age. Xolair 75 mg pre-filled syringe and Xolair 150 mg pre-filled syringe or Xolair powder and solvent for solution for injection may be used in children 6 to 11 years of age with allergic asthma.

If more than one injection is needed to achieve the required dose, injections should be divided across two or more injection sites (see Table 2).

After proper training in subcutaneous injection technique, patients or the caregiver may self-inject Xolair if a physician determines that it is appropriate. It is recommended that the first 3 doses be administered by or under the supervision of a healthcare professional.

Patients or caregivers should be instructed to inject the full amount of Xolair according to the "Instructions for use" at the end of the leaflet.

Powder vial and diluent for solution for injection

There is limited experience with self-administration of Xolair powder and diluent for solution for injection. Therefore treatment with this formulation is intended to be administered by a healthcare professional only.

Full “Instructions for use” are provided at the end of the leaflet.

4.3 CONTRAINDICATIONS

Hypersensitivity to omalizumab or any other component of the formulation.

4.4 SPECIAL WARNINGS AND PRECAUTIONS FOR USE

Abrupt discontinuation of systemic or inhaled corticosteroids after initiation of Xolair therapy in allergic asthma or CRSwNP is not recommended. Decreases in corticosteroids should be performed under the direct supervision of a physician and may need to be performed gradually.

Allergic reactions

As with any protein, local or systemic allergic reactions, including anaphylaxis, may occur. Anaphylactic reactions were rare in clinical trials (see Section 4.8 ADVERSE EFFECTS (UNDESIRABLE EFFECTS)). In post-marketing experience, anaphylaxis and anaphylactoid reactions have been reported following the first and subsequent administrations of Xolair. Most of these reactions occurred within 2 hours after Xolair administration, some occurred beyond 2 hours and even beyond 24 hours after injections. The majority of anaphylactic reactions occurred within the first 3 doses of Xolair. A history of anaphylaxis unrelated to omalizumab may be a risk factor for anaphylaxis following Xolair administration. It is recommended that patients with a known history of anaphylaxis have each dose of Xolair administered in a setting where there is treatment for anaphylaxis available. Patients should be informed that such reactions are possible and prompt medical attention should be sought if allergic reactions occur.

Serum sickness and serum sickness-like reactions, which are delayed allergic type III reactions, have rarely been seen in patients treated with humanized monoclonal antibodies including omalizumab. The onset has typically been 1-5 days after administration of the first or subsequent injections, also after long duration of treatment. Symptoms suggestive of serum sickness include arthritis/arthralgia, rash (urticaria or other forms), fever and lymphadenopathy. Patients should be advised to report any suspected symptoms.

Churg-Strauss syndrome and hypereosinophilic syndrome

Patients with severe asthma may rarely present systemic hypereosinophilic syndrome or allergic eosinophilic granulomatous vasculitis (Churg-Strauss syndrome), both of which are usually treated with systemic corticosteroids. In rare cases, patients on therapy with anti-asthma agents, including omalizumab, may present or develop systemic eosinophilia and vasculitis. A causal association between Xolair and these underlying conditions has not been established. These events are commonly associated with the reduction of oral corticosteroid therapy. In these patients, physicians should be alert to the development of marked eosinophilia, vasculitic rash, worsening pulmonary symptoms, paranasal sinus abnormalities, cardiac complications, and/or neuropathy. Discontinuation of omalizumab should be considered in all severe cases with the above mentioned immune system disorders.

Immunogenicity

As with all protein pharmaceuticals, a small percentage of patients may potentially develop antibodies to the protein. (see Section 4.8 ADVERSE EFFECTS (UNDESIRABLE EFFECTS))

Other IgE-associated disorders

Xolair has not been studied in patients with anaphylaxis, hyperimmunoglobulin E syndrome, allergic bronchopulmonary aspergillosis, food allergy or atopic dermatitis. Parasitic infestation may also result in elevation of serum IgE concentrations. In a study of asthmatic patients who had been treated for gut parasites, the level of reinfection did not differ significantly between omalizumab and placebo groups and there were no serious or severe infections. There is no current evidence to suggest that parasitic infections are predisposed to by omalizumab.

Interpretation of serum IgE levels, skin patch and skin prick testing

Patients treated with Xolair have a rapid reduction in free IgE in the serum but an overall increase in the total serum IgE (commonly measured in clinical laboratories), which reflects free IgE and IgE bound by Xolair. IgE measured following treatment cannot be used to guide treatment or dosing decisions.

Because Xolair reduces free IgE in the serum and tissues, results of skin prick testing, patch testing, and RAST testing for hypersensitivity to potential allergens may be affected. A positive test to a potential allergen in a patient receiving Xolair can be correctly interpreted as representing hypersensitivity to that allergen; however, a negative test in a patient receiving Xolair may not be interpretable. Physicians are urged to use caution in interpreting such tests in patients receiving Xolair.

Thrombocytopenia

At serum concentrations in excess of maximum human exposure used in pivotal clinical trials, dose-related thrombocytopenia occurred in 2 out of 4 non-human primate species studied. The thrombocytopenia was more pronounced in juvenile animals. No Xolair-related thrombocytopenia has been observed in clinical trials, but it has been reported in the post-market setting.

Xolair should be used with caution in patients with thrombocytopenia and patients with a history of thrombocytopenia. It is recommended that patients have a platelet count before commencing therapy with Xolair and then periodically during treatment with Xolair.

Arteriothrombolic Events (ATE)

In controlled clinical trials, interim and final analyses of an observational study, a numerical imbalance of ATE was observed. See Section 4.8 ADVERSE EFFECTS (UNDESIRABLE EFFECTS).

Pre-filled syringe, latex-sensitive individuals

The removable needle cap of Xolair solution for injection in pre-filled syringe contains a derivative of natural rubber latex. Although no natural rubber latex is detected in the removable needle cap, the safe use of Xolair solution for injection in pre-filled syringe in latex-sensitive individuals has not been studied.

Use in hepatic impairment

There have been no studies on the effect of impaired hepatic function on the pharmacokinetics of Xolair. Xolair should be administered with caution in these patients.

Use in renal impairment

There have been no studies on the effect of impaired renal function on the pharmacokinetics of Xolair. Xolair should be administered with caution in these patients.

Use in the elderly

There are limited data available on the use of Xolair in patients older than 65 years but there is no evidence that elderly patients require a different dosage from younger adult patients.

Paediatric use

In allergic asthma, there are currently insufficient safety data to support the use of Xolair in children under the age of 6 years.

In CRSwNP, safety and efficacy in patients below the age of 18 years has not been established.

In chronic spontaneous urticaria, there are currently insufficient safety data to support the use of Xolair in children under the age of 12 years.

Effects on laboratory tests

See Section 4.8 ADVERSE EFFECTS (UNDESIRABLE EFFECTS) – 'Thrombocytopenia'

4.5 INTERACTIONS WITH OTHER MEDICINES AND OTHER FORMS OF INTERACTIONS

In clinical studies, Xolair was effectively and safely used in conjunction with inhaled corticosteroids, inhaled beta agonists and oral antihistamines. No formal drug interaction studies have been performed with Xolair.

Chronic rhinosinusitis with nasal polyps (CRSwNP)

In clinical studies Xolair was used in conjunction with intranasal mometasone spray per protocol. Other commonly used concomitant medications included other intranasal corticosteroids, bronchodilators, antihistamines, leukotriene receptor antagonists, adrenergics/sympathomimetics, and local nasal anesthetics. There was no indication that the safety of Xolair was altered with these other commonly used CRSwNP medications.

Chronic Spontaneous Urticaria (CSU)

In clinical studies in CSU Xolair was used in conjunction with antihistamines (anti-H1, anti-H2) and leukotriene receptor antagonists (LTRAs). In the phase III studies Q4881g and Q4882g all patients received H1 antihistamines in addition to Xolair or placebo. In the phase III study Q4883g, all patients received one or more H1 antihistamine(s), and/or H2 antihistamines and/or LTRAs in addition to Xolair or placebo. There was no evidence that the safety of omalizumab was altered when used with these medicinal products relative to its known safety profile in allergic asthma. In addition, a population pharmacokinetic analysis showed no relevant effect of H2 antihistamines and LTRAs on omalizumab pharmacokinetics (see Section 5.2 PHARMACOKINETIC PROPERTIES).

4.6 FERTILITY, PREGNANCY AND LACTATION

Effects on fertility

There are no human fertility data for omalizumab. Studies in cynomolgus monkeys showed no adverse effects of omalizumab on fertility or general reproductive performance of males or females at weekly doses up to 75 mg/kg SC (yielding about 10 times the maximum anticipated clinical exposure in adult patients, based on serum AUC).

Use in pregnancy – Pregnancy Category B1

Human IgG antibodies are known to cross the placental barrier; therefore, XOLAIR may be transmitted from the mother to the developing fetus. There are no well-controlled clinical studies of Xolair in pregnant women. A prospective pregnancy registry study (EXPECT) in 250 pregnant women with asthma exposed to Xolair showed the prevalence of major congenital anomalies was similar (8.1% vs 8.9%) between EXPECT and disease matched (moderate and severe asthma) patients. There was an increased rate of low birth weight among registry infants compared to infants in the other cohort. This study cannot definitively establish risk due to methodological limitations of the study, including small sample size, nonrandomised design and potential differences between the registry population and the comparator cohort.

Animal data

Studies in cynomolgus monkeys do not indicate direct or indirect harmful effects with respect to pregnancy, embryonic/fetal development, parturition or neonatal growth at weekly doses up to 75 mg/kg SC (yielding about 10 times the maximum anticipated clinical exposure in adult patients, based on serum AUC).

If clinically needed, the use of Xolair may be considered during pregnancy.

Use in lactation

Immunoglobulins G (IgGs) are present in human milk and therefore it is expected that omalizumab will be present in human milk.

The EXPECT study, with 154 infants who had been exposed to Xolair during pregnancy and through breast-feeding did not indicate adverse effects on the breast-fed infant. The interpretation of data may be impacted due to methodological limitations of the study, including small sample size and non-randomised design.

Given orally, immunoglobulin G proteins undergo intestinal proteolysis and have poor bioavailability. No effects on the breast-fed newborns/infants are anticipated. Consequently, if clinically needed, the use of Xolair may be considered during breast-feeding.

Animal data

In order to assess the effect of omalizumab on late gestation, and to evaluate the placental transfer and milk excretion of omalizumab, doses of 75 mg/kg/week were administered subcutaneously to female cynomolgus monkeys. Transport of omalizumab into maternal milk was limited. The serum levels of omalizumab observed in dams, fetuses, and neonates are consistent with reported transport and distribution of IgG class immunoglobulins.

4.7 EFFECTS ON ABILITY TO DRIVE AND USE MACHINES

Patients receiving Xolair should be informed that if they experience dizziness, fatigue, faintness or somnolence they should not drive or use machines.

4.8 ADVERSE EFFECTS (UNDESIRABLE EFFECTS)

Clinical trial experience in allergic asthma

Adverse reactions with Xolair were observed (all studies with adult and adolescent patients 12 years of age and older) at a frequency of 6.6 % of patients, treated with active drug, during clinical trials.

The most commonly associated adverse drug reactions were injection site reactions, including injection site pain, swelling, itching and redness (1.7%) and headaches (1%).

Other adverse reactions most frequently observed were weight increase (0.7%), urticaria (0.4%), fatigue, arm swelling, nausea, pharyngitis and skin rashes (all at 0.3%). Most of these events were mild or moderate in severity.

In clinical trials with patients 6 to <12 years of age, the most commonly reported adverse reactions were headache, pyrexia and upper abdominal pain. Most of the events were mild or moderate in severity.

The adverse reactions listed in Table 4 were recorded in clinical studies in the total allergic asthma safety population treated with Xolair. Adverse reactions are ranked under headings of frequency using the following convention: common (>1/100; <1/10), uncommon (>1/1000; <1/100), rare (<1/1000).

Table 4: Adverse reactions recorded in clinical studies in the total allergic asthma safety population treated with Xolair

Body as a whole disorders
Very common: pyrexia*
Common: injection site reactions
Uncommon: weight increase, fatigue, swelling arms, post-injection phenomena
Cardiovascular disorders
Uncommon: syncope and vasovagal syncope
Vascular disorders
Uncommon: postural hypotension, flushing
Gastrointestinal disorders
Common: abdominal pain upper*
Uncommon: nausea, diarrhoea, dyspeptic signs and symptoms
Infections and infestations
Uncommon: moniliasis
Immune system disorders
Rare: anaphylactic reactions, anti-therapeutic antibody development
Nervous system disorders
Common: headache**
Uncommon: dizziness, somnolence, paresthesia
Respiratory system
Uncommon: pharyngitis, coughing, allergic bronchospasm
Rare: laryngoedema
Skin and subcutaneous tissue disorders
Uncommon: urticaria, rash, pruritus, photosensitivity
Rare: angioedema
Adverse event special categories (causality not established)
Uncommon: asymptomatic platelet decreases, parasitic infections

*In 6 to <12 year old children **Very common in 6 to <12 year old children

The frequencies of adverse reactions in the active treatment group adult and adolescent patients were very similar to those observed in the placebo group. Weight increase (0.7% vs 0.2%, placebo), urticaria (0.4% vs 0.1%, placebo) and local injection site reactions (1.7% vs 1.3%, placebo) were slightly more commonly observed in the active treatment group than in placebo group patients.

Adverse Events (AEs): The most common adverse events observed (frequency of ≥20%) in this adult and adolescent patient population, were headaches, viral infections and upper respiratory tract infections. The frequencies of all adverse events for both treated (N = 1763) and placebo group patients (N =1278) for all studies were very similar.

Serious Adverse Events (SAEs): were reported for 2.6% of Xolair treated patients and 2.8% of placebo-treated patients. The most frequently reported SAE's were appendicitis and fractures (0.2% for both treatment groups and both events). Frequencies of all SAEs by body system were comparable for both treatment groups.

Allergic asthma (adult and adolescent study population): The most frequently observed adverse events in this population (N = 716 Xolair patients, N = 694 placebo patients) were viral infections, upper respiratory tract infections, sinusitis and headaches (frequency ≥20%).

Adverse reactions occurred in 5.6% of Xolair-treated patients and in 5.2% of patients receiving placebo. The most frequently reported events of this type were headaches (1.3% vs 1.2%, placebo) and fatigue (0.6% vs 0%, placebo). All other suspected Xolair drug related adverse events occurred with a frequency of <0.5%.

Serious episodes of asthma related events requiring hospitalisation were observed in 0.2% of Xolair-treated patients and 1.3% of placebo-treated patients, in the asthma studies.

The most frequently observed (≥5%) adverse events in studies with asthma patients 12 years of age and older are provided in Table 5.

Table 5: Most frequently reported adverse events regardless of causality in adult/adolescent asthma population (≥ 5% in either treatment group)

Body system/preferred term	Xolair (N=716)	Placebo (N=694)
Body as a whole		
Fever	5%	5%
Pain	7%	5%
Digestive system		
Diarrhoea	6%	6%
Dyspepsia	6%	5%
Nausea	6%	6%
Gastroenteritis	6%	5%
Pain abdominal	4%	5%
Infections and infestations		
Infection, viral	37%	39%
Musculoskeletal		
Pain back	13%	12%
Arthralgia	8%	7%
Myalgia	6%	6%
Sprains and strains	6%	5%
Nervous		
Headache	27%	27%

Clinical trial experience in Chronic rhinosinusitis with nasal polyps (CRSwNP)

Summary of the safety profile

The data described below reflect data from two placebo-controlled studies in patients ≥18 years of age. In these studies, patients received either Xolair 150 to 600 mg every 2 or 4 weeks or placebo. All patients received background intranasal mometasone therapy. The safety profile in patients with CRSwNP was consistent with that in allergic asthma and CSU. The most frequently (>3%) reported adverse drug reactions, which were higher in frequency in comparison to placebo are shown in Table 6.

Tabulated summary of adverse drug reactions from the clinical studies

Table 6 lists the adverse drug reactions recorded in clinical studies in the total nasal polyp safety population treated with Xolair by system organ class and by frequency. Frequencies are defined as: very common (≥1/10); common (≥1/100 to <1/10); uncommon (≥1/1,000 to <1/100); rare (≥1/10,000 to <1/1,000); very rare (<1/10,000).

Table 6 Adverse drug reactions from the clinical studies in CRSwNP

Adverse drug reactions (by MedDRA preferred term)	Omalizumab Nasal Polyp Study1 and Study 2 Pooled		Frequency category
	Placebo N=130	Omalizumab N =135	
Nervous system disorders			
Headache	7 (5.4%)	11 (8.1%)	Common
Dizziness	1 (0.8%)	4 (3.0%)	Common
Musculoskeletal and connective tissue disorders			
Arthralgia	2 (1.5%)	4 (3.0%)	Common
Gastrointestinal disorder			
Abdominal pain upper	1 (0.8%)	4 (3.0%)	Common
General disorders and administration site conditions			
Injection site reactions (Injection site reactions, Injection related reaction, injection site pain)	2 (1.5%)	7 (5.2%)	Common

Clinical trial experience in Chronic Spontaneous Urticaria (CSU)

Chronic Spontaneous Urticaria (CSU)

Summary of the safety profile

The safety and tolerability of omalizumab were investigated with the doses of 75 mg, 150 mg and 300 mg every four weeks in 975 CSU patients, 242 of whom received placebo. 733 patients were treated with omalizumab for up to 12 weeks and 490 patients for up to 24 weeks. 175 and 412 patients were treated for up to 12 weeks and 87 and 333 patients were treated for up to 24 weeks at the recommended doses of 150 mg and 300 mg respectively.

During clinical studies with adult and adolescent patients (12 years of age and older) the most commonly reported adverse reactions observed were headache and nasopharyngitis.

Tabulated summary of adverse reactions from the clinical studies at the recommended doses (150 mg and 300 mg)

Adverse reactions (events occurring in ≥1% of patients in any treatment group and ≥2% more frequently in any omalizumab treatment group than in the placebo group after medical review) reported at the recommended doses (150 mg and 300 mg) in the three pooled Phase III studies are listed by MedDRA system organ class (Table 7). Within each system organ class, the adverse reactions are ranked by frequency, with the most frequent reactions listed first. The corresponding frequency category for each adverse reaction is based on the following convention (CIOMS III): very common (≥1/10); common (≥1/100 to <1/10); uncommon (≥1/1,000 to <1/100); rare (≥1/10,000 to <1/1000); very rare (<1/10,000); not known (cannot be estimated from the available data).

Table 7: Adverse reactions from the pooled CSU safety database (day 1 to week 12) at the recommended doses

Adverse reactions (by MedDRA preferred term)	**Omalizumab Studies Q4881g, Q4882g and Q4883g Pooled**			**Frequency category**
	Placebo N=242	150 mg N=175	300 mg N=412	
Infections and infestations				
Nasopharyngitis	17 (7.0%)	16 (9.1%)	27 (6.6%)	Common
Sinusitis	5 (2.1%)	2 (1.1%)	20 (4.9%)	Common
Viral upper respiratory tract infection	0	4 (2.3%)	2 (0.5%)	Common
Nervous system disorders				
Headache	7 (2.9%)	21 (12.0%)	25 (6.1%)	Very common
Musculo skeletal and connective tissue disorders				
Arthralgia	1 (0.4%)	5 (2.9%)	12 (2.9%)	Common

Additional events reported anytime during the day 1 to week 24 treatment period (studies Q4881g and Q4883g) that met the criteria of adverse reactions:Infections and infestations: upper respiratory tract infections (placebo 3.1%, 150 mg 3.4%, 300 mg 5.7%), urinary tract infection (placebo 1.8%, 150 mg 4.6%, 300 mg 2.4%).

Nervous system disorders: sinus headache (placebo 0%, 150 mg 2.3%, 300 mg 0.3%).

Musculoskeletal and connective tissue disorders: myalgia (placebo 0%, 150 mg 2.3%, 300 mg 0.9%), pain in extremity (placebo 0%, 150 mg 3.4%, 300 mg 0.9%), musculoskeletal pain (placebo 0%, 150 mg 2.3%, 300 mg 0.9%).

General disorders and administration site conditions: pyrexia (placebo 1.2%, 150 mg 3.4%, 300 mg 0.9%).

Injection site reactions: Injection site reactions occurred during the studies in more omalizumab-treated patients than placebo patients (2.7% at 300 mg, 0.6% at 150 mg, 0.8% with placebo). They included: swelling, erythema, pain, bruising, itching, bleeding and urticaria.

Post-marketing observations:

The following reactions have been identified through spontaneous reporting.

Immune system disorders

Anaphylaxis and anaphylactoid reactions have been reported following the first or subsequent administrations, serum sickness (see Section 4.4 SPECIAL WARNINGS AND PRECAUTIONS FOR USE and Section 4.8 ADVERSE EFFECTS (UNDESIRABLE EFFECTS) - 'Allergic events').

Skin and subcutaneous disorders

Alopecia.

Blood and lymphatic system disorders

Idiopathic severe thrombocytopenia.

Respiratory, thoracic and mediastinal disorders

Churg Strauss syndrome (ie. Eosinophilic Granulomatosis with Polyangitis)

Musculoskeletal and connective tissue disorders

Arthralgia, myalgia, joint swelling

Description of safety aspects of special interest

Allergic events: As with any protein, local or systemic allergic or Type I hypersensitivity events can occur. Frequencies of all allergic-type events were similar for both treatment groups of the total study population in adults and adolescents (4%, Xolair, 6%, placebo). Events such as vasovagal syncope, postural hypotension, allergic bronchospasm and photosensitivity occurred in <1% of patients in each treatment group. (see Section 4.4 SPECIAL WARNINGS AND PRECAUTIONS FOR USE)

In post-marketing reports, the frequency of anaphylaxis in patients exposed to Xolair use was estimated to be 0.2% based on a total number of anaphylactic reactions observed from an estimated exposure of over 500,000 patient years.

Parasitic infections: In patients at chronic high risk of helminth infection, a placebo-controlled trial showed a numerical increase in infection rate with omalizumab that was not statistically significant. The course, severity, and response to treatment of infections were unaltered (see Section 4.4 SPECIAL WARNINGS AND PRECAUTIONS FOR USE – 'Other IgE-associated disorders').

Malignancies: During initial clinical trials for adults and adolescents 12 years of age and older, there was a numerical imbalance in cancers arising in the active treatment group (25 patients of 5015), compared with the control group (5 patients of 2854). The number of observed cases was uncommon (<1/100) in both the active (0.5%) and the control group, (0.2%). The observed cases in Xolair-treated patients included breast, non-melanoma skin, prostate, melanoma and parotid malignancies. The overall observed incidence rate of malignancy in the initial Xolair clinical trial programme was comparable to that reported in the general population (0.4%).

In a subsequent observational study comparing 5007 Xolair-treated and 2829 non-Xolair-treated patients followed for up to 5 years, the incidence rates of primary malignancies per 1000 patient years were 16.01 (295/18426 patient years) and 19.07 (190/9963 patient years), respectively, which does not indicate an increased malignancy risk (rate ratio 0.84, 95% confidence interval, 0.62-1.13). In a further analysis of randomised, double-blind, placebo-controlled clinical trials including 4254 patients on Xolair and 3178 patients on placebo, Xolair treatment was not associated with an increased malignancy risk based on incidence rates per 1000 patient years of 4.14 (14/3382 patient years) for Xolair treated patients and 4.45 (11/2474 patient years) for placebo patients (rate ratio 0.93, 95% confidence interval 0.39-2.27).

Arterial Thromboembolic Events (ATE): In controlled clinical trials and during interim analyses of an observational study, a numerical imbalance of ATEs was observed. ATE included stroke, transient ischemic attack, myocardial infarction, unstable angina, and cardiovascular death (including death from unknown cause). In the final analysis of the observational study, a numerical imbalance of ATEs was observed for: transient ischemic attack, myocardial infarction, unstable angina, and cardiovascular death (including death from unknown cause) while no notable numerical imbalance was observed for stroke. The rate of ATE per 1000 patient years was 7.52 (115/15286 patients years) for Xolair-treated patients and 5.12 (51/9963 patient years) for control patients. In a multivariate analysis controlling for available baseline cardiovascular risk factors, the hazard ratio was 1.32 (95% confidence interval 0.91-1.91). In a new analysis of pooled clinical trials including all randomised double-blind, placebo-controlled clinical trials of 8 or more weeks duration, the rate of ATE per 1000 patient years was 2.69 (5/1856 patients years) for Xolair-treated patients and 2.38 (4/1680 patient years) for placebo patients (rate ratio 1.13, 95% confidence interval 0.24-5.71).

Thrombocytopenia: In clinical trials 0.6% of adult and adolescent patients experienced platelet counts below the lower limit of the normal laboratory range. None of these changes was associated with bleeding episodes or a decrease in haemoglobin. No pattern of persistent decrease in platelet counts has been reported in humans (patients greater than 6 years of age), as observed in non-human primates. (See Section 4.4 SPECIAL WARNINGS AND PRECAUTIONS FOR USE)

Other laboratory data: There was no evidence of clinically relevant changes in laboratory safety tests during clinical trials.

Reporting suspected adverse effects

Reporting suspected adverse reactions after registration of the medicinal product is important. It allows continued monitoring of the benefit-risk balance of the medicinal product. Healthcare professionals are asked to report any suspected adverse reactions at www.tga.gov.au/reporting-problems.

4.9 OVERDOSE

No cases of overdose have been reported. A maximum tolerated dose of Xolair has not been determined. Single intravenous doses up to 4000 mg have been administered to patients without evidence of dose-limiting toxicities. The highest cumulative dose administered to patients was 44,000 mg over a 20-week period and this dose did not result in any untoward acute effects.

For information on the management of overdose, contact the Poisons Information Centre on 13 11 26 (Australia).

5 PHARMACOLOGICAL PROPERTIES

5.1 PHARMACODYNAMIC PROPERTIES

Mechanism of action

General Characteristics

Omalizumab is a recombinant DNA-derived humanised monoclonal antibody that selectively binds to human immunoglobulin E (IgE). The antibody is an IgG_1 kappa that contains human framework regions with the complementary-determining regions of a humanised murine antibody that binds to IgE.

Patients with Allergic Asthma and Chronic rhinosinusitis with nasal polyps (CRSwNP)

IgE plays a major role in the pathophysiology of inflammatory diseases in the airways. The allergic cascade is initiated when IgE bound to the high affinity IgE receptor FcεRI, on the surface of mast cells and basophils is crosslinked by allergen. This results in the degranulation of these effector cells and the release of histamines, leukotrienes, cytokines and other mediators. These mediators are causally linked to the pathophysiology of asthma, including airway oedema, smooth muscle contraction and altered cellular activity associated with the inflammatory process. They also contribute to the signs and symptoms of allergic asthma such as bronchoconstriction, mucous production, wheezing, dyspnoea and chest tightness.

Omalizumab binds to IgE at the same site as the high-affinity FcεRI receptor, thereby reducing the amount of free IgE that is available to bind to the receptor. Treatment with omalizumab also reduces the number of FcεRI receptors on basophils in atopic subjects and histamine release was reduced in response to allergen challenge in those subjects. Treatment with Xolair inhibits IgE-mediated inflammation, as evidenced by reduced blood and tissue eosinophils and reduced inflammatory mediators, including IL-4, IL-5, and IL-13 by innate, adaptive and non-immune cells.

Patients with Allergic Asthma

Clinical studies in asthma patients' showed that, serum free IgE levels (e.g. unbound IgE) are reduced in a dose dependent manner within 2 hours of subcutaneous dosing. Average decreases were 84-99% of baseline.

Serum total IgE levels (e.g. bound or unbound) increased an average of 4-fold post-dosing due to formation of omalizumab-IgE binding. Following discontinuation of omalizumab dosing, increases in total IgE and decreases in free IgE were reversible with no rebound in IgE levels after drug washout.

Patients with Chronic rhinosinusitis with nasal polyps (CRSwNP)

In clinical studies in patients with CRSwNP, Xolair treatment led to a reduction in serum free IgE and an increase in serum total IgE levels, similar to the observations in patients with allergic asthma. After repeated dosing every 2 or 4 weeks, with dosage and frequency according to Table 2 (see section 4.2 Dose and method of administration), mean pre-dose serum free IgE levels decreased by approximately 95% and remained stable between 16 and 24 weeks of treatment. Total IgE levels in serum increased due to the formation of omalizumab-IgE complexes, which have a slower elimination rate compared with free IgE. After repeated dosing every 2 or 4 weeks, with dosage and frequency according to Table 2 (see section 4.2 Dose and method of administration), mean pre-dose serum total IgE levels at Week

16 were 3- to 4- fold higher compared with pre-treatment levels, and remained stable between 16 and 24 weeks of treatment.

Patients with Chronic Spontaneous Urticaria (CSU)

There are several theories for the etiology of CSU, including one that suggests an autoimmune origin. Autoimmune antibodies to IgE and its receptor, FcεRI, have been isolated from the serum of some patients with CSU. These autoantibodies can activate basophils or mast cells leading to release of histamine.

One hypothesis for the mechanism of action of omalizumab in CSU is that it lowers free IgE levels in the blood and subsequently in the skin. This leads to down-regulation of surface IgE receptors, thereby decreasing downstream signaling via the FcεRI pathway, resulting in suppressed cell activation and inflammatory responses. As a consequence, the frequency and severity of symptoms of CSU are lessened. Another hypothesis is that lowering circulating free IgE levels leads to a rapid and non-specific desensitisation of cutaneous mast cells. Down-regulation of FcεRI may help to sustain the response.

In clinical studies in CSU patients, omalizumab treatment led to a dose-dependent reduction of free IgE and an increase of total IgE levels in serum, similar to the observations in allergic asthma patients. Maximum suppression of free IgE was observed 3 days after the first subcutaneous dose. After repeated dosing once every 4 weeks, pre-dose serum free IgE levels remained stable between 12 and 24 weeks of treatment. Total IgE levels in serum increased after the first dose due to the formation of omalizumab:IgE complexes which have a slower elimination rate compared with free IgE. After repeated dosing once every 4 weeks at 75 mg to 300 mg, average pre-dose serum total IgE levels at week 12 were two-to three-fold higher compared with pre-treatment levels, and remained stable between 12 and 24 weeks of treatment. After discontinuation of Xolair, free IgE levels increased and total IgE levels decreased towards pre-treatment levels over a 16-week treatment-free follow-up period.

Clinical trials

Allergic Asthma

Adults and adolescents ≥ 12 years of age

The efficacy and safety of Xolair were demonstrated in a 28-week pivotal, placebo-controlled study (study 2306) involving 419 severe allergic asthmatics, ages 12-79 years, who had reduced lung function (FEV_1 40–80% predicted) and poor asthma symptom control despite receiving >1000 micrograms of beclomethasone dipropionate (or equivalent) plus long-acting beta-2-agonist. Eligible patients had experienced multiple asthma exacerbations requiring systemic corticosteroid treatment or had been hospitalised or attended an emergency room due to a severe asthma exacerbation in the past year despite continuous treatment with high-dose inhaled corticosteroids and long-acting beta-2-agonist. Subcutaneous Xolair or placebo were administered as add-on therapy to >1000 micrograms inhaled beclomethasone dipropionate (or equivalent) plus long-acting beta2-agonist. Oral corticosteroid (22%), theophylline (27%) and anti-leukotriene (35%) maintenance therapies were allowed. In the treatment phase concomitant asthma therapy was not changed.

The rate of asthma exacerbations requiring treatment with systemic corticosteroids was the primary endpoint. The exacerbation rate was 0.74 on omalizumab and 0.92 on placebo and these did not differ significantly (p=0.153), however there was a difference between groups in this baseline exacerbation rate. When the analysis was adjusted for this baseline imbalance, the exacerbation rate was 0.68 on omalizumab and 0.91 on placebo (p=0.042). This approximates to a 74% (95% CIs 55%-99%) treatment effect ratio favouring omalizumab over the 28-week treatment period. Severe exacerbations (lung function less than 60% of personal best) were halved (49 omalizumab vs 100 placebo, p=0.008) resulting in 43.9% fewer asthma-related emergency visits comprised of hospitalisations, emergency room, and unscheduled doctor visits (p=0.038). The reduction in exacerbations in omalizumab-treated patients was seen in the context of statistically significant improvements in asthma symptoms, quality of life and lung function.

There were four large placebo-controlled supportive studies in adults and adolescents (>90% meeting global criteria of severe persistent asthma) (Studies 2304, 008, 009 and 011) and one further randomised standard therapy controlled study (study IA04) which most closely matched the population in study 2306. Studies 2304, 008, 009 and IA04 used exacerbation as primary endpoint, whereas study 011 primarily evaluated inhaled corticosteroid sparing.

In study 2304 the safety and efficacy of omalizumab were demonstrated in 405 patients with co-morbid allergic asthma and perennial allergic rhinitis. Eligible patients had both symptomatic allergic asthma and perennial allergic rhinitis. Patients were treated with omalizumab or placebo for 28 weeks as add-on therapy to ≥400 micrograms of inhaled budesonide. Inhaled long-acting beta2-agonists (39%) and nasal corticosteroids (17%) were allowed.

The co-primary endpoints for study 2304 were the incidence of asthma exacerbations (worsening of asthma requiring systemic corticosteroids or a doubling of the patient's baseline budesonide dose) and the proportion of patients in each treatment group with a ≥1.0 improvement from baseline at the end of the treatment phase in both asthma and rhinitis specific quality of life assessments (Juniper Quality of Life Assessment).

Patients treated with omalizumab had a significantly lower incidence of asthma exacerbations than patients receiving placebo (20.6% omalizumab vs 30.1% placebo, p=0.02) and there was a significantly higher proportion of omalizumab-treated than placebo patients that improved by ≥1.0 points in both asthma and rhinitis specific quality of life assessments (57.7% omalizumab vs 40.6% placebo, p<0.0001).

The reduction in exacerbations and improvements of quality of life in omalizumab-treated patients were seen in the context of statistically significant improvements in both rhinitis and asthma symptoms, and lung function, compared to placebo.

In two identical 16-week studies (008 and 009), the safety and efficacy of omalizumab as add-on therapy were demonstrated in 1,071 allergic asthmatics, who were symptomatic despite treatment with inhaled corticosteroids (beclomethasone dipropionate 500 to 1,200 micrograms/day).

In both trials omalizumab was superior to placebo with respect to the primary variable of asthma exacerbation (worsening of asthma requiring systemic corticosteroids or a doubling of the patient's baseline beclomethasone dose). The number of asthma exacerbations was significantly lower in the

omalizumab group (p=0.006 and p<0.001 in studies 008 and 009, respectively). Fewer omalizumab-treated patients experienced asthma exacerbations (14.6% vs 23.3%, p=0.009 in study 008 and 12.8% vs 30.5%, p<0.001 in study 009).

In double-blind extension phases of both studies out to one year the reduction in the frequency of asthma exacerbations for omalizumab-treated patients compared to placebo-treated patients was maintained.

Study IA04 was a randomised, controlled, open-label study for 52 weeks in 312 adult and adolescent patients with poorly controlled allergic asthma. Patients received omalizumab as add-on to current asthma treatment (median dose of inhaled corticosteroids was 2000 micrograms/day, 78% were receiving a long-acting beta2-agonist) or current asthma treatment alone. Patients had to have at least one asthma-related hospitalisation or emergency room visit and at least one additional course of oral corticosteroids due to asthma in the previous year.

Treatment with omalizumab led to a 61% reduction in clinically significant asthma exacerbation rate (p<0.001) compared to current asthma therapy alone. This reduction in exacerbations was seen in the context of statistically significant improvements in asthma symptoms, lung function and rescue medication use.

In study 011 the safety and corticosteroid-sparing effect of omalizumab was demonstrated in 246 patients with severe allergic asthma requiring daily treatment with high-dose inhaled corticosteroids (fluticasone ≥1000 micrograms/day) and in whom long-acting beta2-agonists were allowed. The study included a 16-week steroid stable phase with study medication added, followed by a 16-week steroid reduction phase.

The percent reduction in inhaled corticosteroid dose at the end of the treatment phase was significantly greater in omalizumab-treated patients versus placebo patients (median 60% vs. 50%, p=0.003). The proportion of omalizumab patients who were able to reduce their fluticasone dose to ≤500 micrograms/day was 60.3% versus 45.8% in the placebo group (p<0.05).

The clinically meaningful treatment differences in exacerbation rates were comparable for all studies. Table 8 provides annualised exacerbation rates for each study.

Table 8: Comparison of annualised asthma exacerbations rates per patient across studies

	Omalizumab exacerbations/year	Placebo exacerbations/year	P-value for rate ratio	Treatment difference in annual rate
Study 2306	1.357	1.847	0.039	0.49
Study 2304	0.491	0.785	0.027	0.29
Study 008	0.592	0.992	<0.001	0.40
Study 009	0.514	1.212	<0.001	0.70
Study IA04	0.989	2.470	<0.001	1.48
Study 011	1.176	1.600	0.165	0.42

Study 008 and 009 rates based on one year treatment period. Study 011 includes an oral-steroid-dependent population (n=95) not included in the primary population that assessed inhaled corticosteroid reduction.

In a subgroup analysis of study 2306 (conducted in subjects with severe asthma), patients with pre-treatment total IgE < 76 IU/mL were less likely to experience a clinically meaningful benefit. In these patients Xolair did not significantly reduce asthma exacerbation compared to placebo, whereas in patients with pre-treatment total IgE > 76IU/L, the rate of asthma exacerbations was reduced by 40% (p = 0.002).

There are no efficacy data in patients with mild asthma (eg. those not already on inhaled steroids).

In the clinical trials of Xolair, all subjects had a positive skin test or serum IgE RAST to a relevant aeroantigen. The efficacy of Xolair in subjects who are negative for these tests is unknown.

Quality of life

Asthma-related quality of life scores were measured using the Juniper Quality of Life assessments. For all six studies there was a statistically significant improvement from baseline in Quality of Life scores for omalizumab patients versus the placebo or control group (Table 9). Improvements were demonstrated in all four asthma-specific domains of the asthma quality of life questionnaire - symptoms, activities, emotional function and environmental exposure - as well as in the overall score. In five of the six studies, a statistically significantly higher number of omalizumab patients than control patients showed a clinically meaningful improvement (≥0.5 points) in total Quality of Life score.

Table 9: Proportion of patients with a clinically meaningful improvement in QOL and mean change from baseline compared to placebo/control

	Proportion of patients with a clinically meaningful improvement in QOL		Mean difference in change from baseline compared to placebo/control
	Omalizumab (%)	Placebo/Control (%)	
Study 2306	60.8*	47.8	0.45*
Study 2304	78.8*	69.8	0.25*
Study 008	74.6*	65.5	0.28*
Study 009	68.4	69.3	0.32*
Study IA04	71.8*	43.2	0.48*
Study 011	52.3*	35.7	0.28*
* p<0.05 (comparison of omalizumab to placebo/control)			

Children 6 to <12 years of age

The primary support for safety and efficacy of Xolair in the 6 to <12 years of age group comes from one randomised, double-blind, placebo controlled, multi-centre trial (study IA05)

Study IA05 was a 52 week study that evaluated the safety and efficacy of Xolair as add-on therapy in 628 moderate to severe allergic asthmatics who were uncontrolled despite treatment with regular inhaled corticosteroids (fluticasone propionate DPI ≥200 mcg/day or equivalent) with or without other controller asthma medications. Eligible patients were those with a diagnosis of asthma > 1 year, a positive skin prick test to at least one perennial aeroallergen, and a history of clinical features of moderate to severe persistent asthma, including daytime and/or night-time symptoms along with a history of experiencing exacerbations within the year prior to study entry. Long-acting beta2-agonists (67.4%), anti-leukotriene (36.6%) and oral corticosteroid (1.3%) maintenance therapies were allowed.

During the first 24 weeks of treatment, a patient's steroid doses remained constant from baseline and this was followed by a 28 week period during which inhaled corticosteroid adjustment was allowed.

The primary efficacy objective was to demonstrate the effect of omalizumab on the clinically significant asthma exacerbation rate during the 24 week double-blind fixed steroid treatment. A clinically significant exacerbation was defined as a worsening of asthma symptoms as judged clinically by the investigator, requiring doubling of the baseline inhaled corticosteroid dose for at least 3 days and/or treatment with rescue systemic (oral or iv) corticosteroids for at least 3 days.

Patients receiving omalizumab had a statistically significantly lower rate of asthma exacerbations than patients receiving placebo (rate ratio 0.693, p=0.007). The difference in exacerbation rates between omalizumab and placebo represents a 31% relative decrease in exacerbations. During the entire 52-week treatment period, patients receiving omalizumab had a statistically significantly lower rate of asthma exacerbations than patients receiving placebo (rate ratio 0.573, p<0.001), which represents a 43% relative decrease in exacerbations.

After 24 weeks of treatment, reductions in mean nocturnal symptom score and rescue medication use were numerically greater in omalizumab-treated patients compared with placebo.

A pre-specified subgroup of patients with inadequately controlled severe asthma despite receiving high-dose ICS (fluticasone propionate DPI ≥ 500 µg/day or equivalent) and a LABA, with or without other controller medications (n=235), was analysed. After 24 weeks, patients in this subgroup who received omalizumab demonstrated a statistically significantly lower rate of asthma exacerbations than patients receiving placebo (rate ratio 0.662, p=0.047), which represents a 34% relative decrease in exacerbations. In the second 28-week treatment period, patients in this subgroup who received omalizumab had a statistically significantly lower rate of asthma exacerbations than patients receiving placebo (rate ratio 0.37, p < 0.001), which represents a 63% relative decrease in exacerbations. During the entire 52-week double-blind treatment period, patients in this subgroup who received omalizumab had a statistically significantly lower rate of asthma exacerbations than patients receiving placebo (rate ratio 0.504, p<0.001), which represents a 50% relative decrease in exacerbations.

Efficacy in patients 6 to <12 years of age with more moderate asthma (Study 010) was apparent with reductions in exacerbation rates that were comparable to those observed in the more severe patient population (Study IA05).

Study 010 was a 28 week double blind controlled study in 334 patients who were well controlled with inhaled corticosteroids. During the first 16 weeks patients' steroid doses remained constant from baseline followed by a 12 week steroid reduction period. The rate of clinically significant asthma exacerbations during the 16-week fixed steroid treatment period was statistically significantly lower in omalizumab patients compared with placebo (rate ratio 0.577, p=0.033), representing a 42% relative decrease for omalizumab patients. The rate of clinically significant asthma exacerbations during the 28-week double-blind treatment period was statistically significantly lower in omalizumab patients compared with placebo (p<0.001), representing a relative decrease of 50%.

The percentage reduction of ICS dose at the end of the 28-week treatment period was statistically significantly greater for omalizumab patients (p=0.013). At the end of the 28-week treatment period, greater benefits were observed in change from baseline Paediatric Asthma Quality of Life

Questionnaire (PAQLQ) for omalizumab-treated patients compared to placebo-treated patients (p=0.030).

Chronic rhinosinusitis with nasal polyps (CRSwNP)

The safety and efficacy of Xolair were evaluated in two randomized, multicenter, double-blind, placebo-controlled clinical trials that enrolled patients with CRSwNP (study 1, N=138; study 2, N=127). Patients received Xolair or placebo subcutaneously every 2 or 4 weeks, with dosage and frequency according to Table 2 (see section 4.2 Dose and Method of administration). All patients received background intranasal mometasone therapy throughout the study. Prior sino-nasal surgery or prior systemic corticosteroid usage were not required for inclusion in the studies. Patients received Xolair or placebo for 24 weeks followed by a 4-week follow-up period. Demographics and baseline characteristics, including allergic comorbidities, are described in Table 10.

Table 10 Demographics and baseline characteristics of CRSwNP Studies

Parameter	**Nasal Polyp Study 1 N=138**	**Nasal Polyp Study 2 N=127**
Mean age (years) (SD)	51.0 (13.2)	50.1 (11.9)
% Male	63.8	65.4
Patients with systemic corticosteroid use in the previous year (%)	18.8	26.0
Mean bilateral endoscopic NPS* (SD), range 0-8	6.2 (1.0)	6.3 (0.9)
Mean nasal congestion (NC) score* (SD), range 0-3	2.4 (0.6)	2.3 (0.7)
Mean sense of smell score* (SD) range 0-3	2.7 (0.7)	2.7 (0.7)
Mean SNOT-22 total score* (SD) range 0-110	60.1 (17.7)	59.5 (19.3)
Mean blood eosinophils (cells/µl) (SD)	346.1 (284.1)	334.6 (187.6)
Mean total IgE IU/mL (SD)	160.9 (139.6)	190.2 (200.5)
Asthma (%)	53.6	60.6
Mild (%)	37.8	32.5
Moderate (%)	58.1	58.4
Severe (%)	4.1	9.1
Aspirin exacerbated respiratory disease (%)	19.6	35.4
Allergic rhinitis	43.5	42.5

SD=standard deviation; NPS=nasal polyp score; SNOT-22 = Sino-Nasal Outcome Test 22 Questionnaire; IgE = Immunoglobulin E; IU=international units. For NPS, NCS, sense of smell, post nasal drip, runny nose, and SNOT-22 scores higher scores indicate greater disease severity

The co-primary endpoints were bilateral nasal polyp score (NPS) and average daily nasal congestion score (NCS) at Week 24. NPS was measured via endoscopy at baseline and pre-specified time points and scored (range 0-4 per nostril) for a total NPS (range 0/best-8/worst). Nasal congestion was measured by a daily NCS (range 0/best-3/worst). Patients were required to have NPS ≥ 5 and weekly average of NCS > 1 prior to randomization, despite use of intranasal mometasone. The mean NPS at baseline was balanced between the two treatment groups in both studies.

In both CRSwNP studies 1 and 2, patients who received Xolair had a statistically significant greater improvement from baseline at Week 24 in NPS and weekly average NCS than patients who received placebo. Results from Nasal Polyps Study 1 and 2 are shown in Table 11.

The greater improvements in NPS and NCS in the Xolair group compared to the placebo group were observed as early as the first assessment at Week 4 in both studies as seen in Figure 1. The LS mean difference in change from baseline at Week 4 in NPS in Xolair compared to placebo was -0.92 (95% CI: -1.37, -0.48) in study 1 and -0.52 (95% CI: -0.94, -0.11) in study 2. The LS mean difference in change from baseline at Week 4 in NCS in Xolair compared to placebo was -0.25 (95% CI: -0.46, -0.04) in study 1 and -0.26 (95% CI: -0.45, -0.07) in study 2. However, statistical tests at this time point were not pre-specified.

Table 11 Change from baseline at Week 24 in clinical scores from Nasal Polyp Study 1 and Nasal Polyp Study 2

	Nasal Polyp Study 1		**Nasal Polyp Study 2**	
	Placebo	**Xolair**	**Placebo**	**Xolair**
N	66	72	65	62
Nasal polyp score				
Baseline mean	6.32	6.19	6.09	6.44
LS mean change at Week 24	0.06	-1.08	-0.31	-0.90
Difference in LS means vs. placebo	-1.14		-0.59	
95% CI for difference	-1.59, -0.69		-1.05, -0.12	
p-value	<0.0001		0.0140	
7-day average of daily nasal congestion score				
Baseline mean	2.46	2.40	2.29	2.26
LS mean change at week 24	-0.35	-0.89	-0.20	-0.70
Difference in LS means vs. placebo	-0.55		-0.50	
95% CI for difference	-0.84, -0.25		-0.80, -0.19	
p-value	0.0004		0.0017	
UPSIT				
Baseline mean	13.56	12.78	13.27	12.87
LS mean change at week 24	0.63	4.44	0.44	4.31
Difference in LS means vs. placebo	3.81		3.86	
95% CI for difference	1.38, 6.24		1.57, 6.15	
p-value	0.0024		0.0011	

LS=least-square

Figure 1 **Mean change from baseline in nasal congestion score and mean change from baseline in nasal polyp score by treatment group in Nasal Polyp Study 1 and Nasal Polyp Study 2**

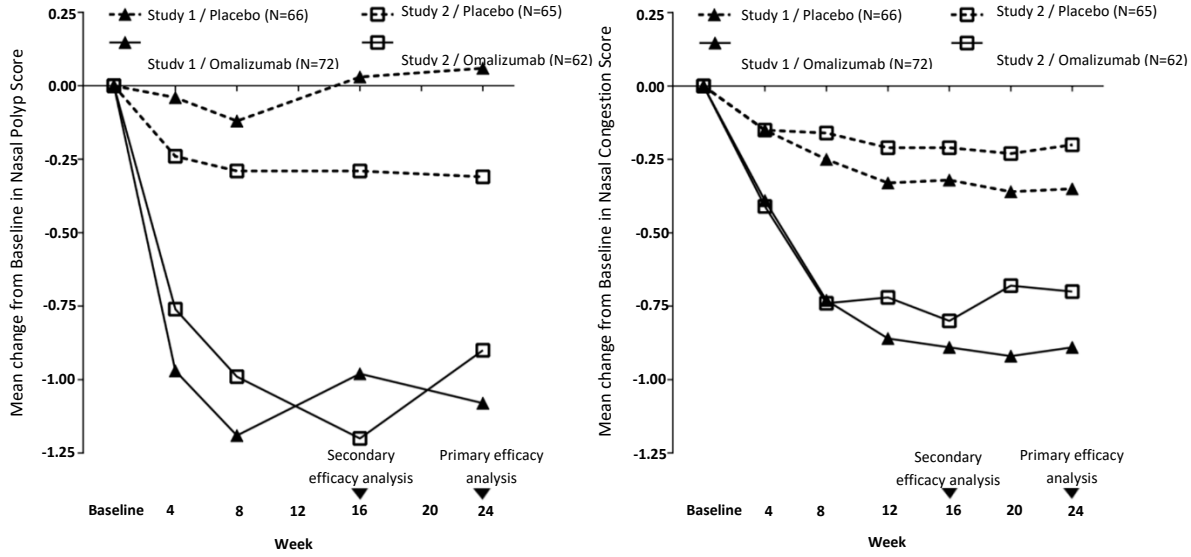

A key secondary endpoint was the assessment of the change from baseline at Week 24 of the total nasal symptom score (TNSS). Patient-reported TNSS was the sum of four equally weighted individual daily symptom scores: NCS, sense of smell score, posterior rhinorrhea score, and anterior rhinorrhea score. The TNSS ranged from 0/best-12/worst. Xolair significantly improved the average daily TNSS compared to placebo. The LS mean difference for change from baseline to Week 24 was -1.91 points (95% CI: -2.85, -0.96; p = 0.0001) in study 1 and -2.09 points (95% CI: -3.00, -1.18; p < 0.0001) in study 2.

The SNOT-22 (Sino-Nasal Outcome Test), combines measures of sinonasal symptoms with psychological and sleep dysfunction measures and has a score that ranges from 0 to 110 (0/best-110/worst). The minimal clinical important difference has been established as 8.9. The proportion of patients who experienced an improvement from baseline at Week 24 of at least the MID (8.9 points) in SNOT-22 score for the individual studies was: Study GA39688 - 30/65 (46.2%) in the placebo arm and 53/69 (76.8%) in the omalizumab arm, OR of 4.55 (95% CI 2.07, 9.97; p=0.0002); Study GA39855in and 23/63 (36.5%) in the placebo arm and 39/59 (66.1%) in the omalizumab arm, OR 3.71 (95% CI: 1.72, 8.04; p=0.0009).

Additional secondary endpoint analyses included Week 16 assessments of NPS and NCS. Xolair significantly improved the NPS at week 16, (range 0/best-8/worst) compared to placebo. The LS mean difference for change from baseline to Week 16 in Xolair compared to placebo was -1.01 (95% CI: -1.43, -0.60; p < 0.0001) in study 1 and -0.91 (95% CI: -1.39, -0.44; p = 0.0002) in study 2. Xolair significantly improved the NCS at week 16, (range 0/best-3/worst) compared to placebo. The LS mean difference for change from baseline to Week 16 in average daily NCS in Xolair compared to placebo was -0.57 (95% CI: -0.83, -0.31; p < 0.0001) in study 1 and of -0.59 (95% CI: -0.87, -0.30; p < 0.0001) in study 2.

In a pre-specified pooled analysis of rescue treatment (systemic corticosteroids for $\geq$ 3 consecutive days or nasal polypectomy) during the 24-week treatment period, the proportion of patients requiring

rescue treatment was lower in Xolair compared to placebo (2.3% versus 6.2%, respectively). The treatment arm difference was not statistically significant (OR: 0.38; 95% CI: 0.10, 1.49; nominal p=0.1639). There were no sino-nasal surgeries reported in either study.

Chronic Spontaneous Urticaria (CSU)

The efficacy and safety of Xolair were demonstrated in two randomised, placebo-controlled phase III studies (study Q4881g, Q4882g) in patients with CSU who remained symptomatic despite H1 antihistamine therapy at the approved dose. All patients received Xolair or placebo in addition to H1 antihistamines. A third study (Q4883g) primarily evaluated the safety of Xolair in patients with CSU who remained symptomatic despite treatment with H1 antihistamines at increased doses and H2 antihistamine and/or leukotriene receptor antagonist (LTRA) treatment. All patients received Xolair or placebo in addition to H1 antihistamines up to 4 times the approved dose, and/or H2 antihistamines and/or LTRAs.

CSU patients with external triggers were excluded from these trials. The three studies enrolled 975 patients aged between 12 and 75 years (mean age 42.3 years; 39 patients 12-17 years, 54 patients ≥65 years; 259 males and 716 females). All patients were required to have inadequate symptom control, as assessed by a weekly urticaria activity score (UAS7, range 0 42) of ≥16, and a weekly itch severity score (which is a component of the UAS7; range 0 21) of ≥8 for the 7 days prior to randomisation, despite having used an antihistamine for at least 2 weeks beforehand.

In studies Q4481g and Q4882g, patients had a mean weekly itch severity score of between 13.7 and 14.5 at baseline and a mean UAS7 score of 29.5 and 31.7 respectively. Patients in safety study Q4883g had a mean weekly itch severity score of 13.8 and a mean UAS7 score of 31.2 at baseline. Across all three studies, patients reported receiving on average 4 to 6 medications (including H1 antihistamines) for CSU symptoms prior to study enrolment. Patients received Xolair at 75 mg, 150 mg or 300 mg or placebo by subcutaneous injection every 4 weeks for 24 and 12 weeks in studies 1 and 2, respectively, and 300 mg or placebo by subcutaneous injection every 4 weeks for 24 weeks in study 3. All studies had a 16 week treatment-free follow-up period.

Table 12: Efficacy endpoints

Change from baseline to week 12 in weekly Itch Severity Score (ISS, range 0-21)	Primary endpoint in studies Q4881g and Q4882g Secondary endpoint in safety study Q4883g
Time to MID [a] response (decrease from baseline of ≥5 points) in weekly ISS up to week 12	Secondary endpoints in all three studies Q4881g, Q4882g and Q4883g
Change from Baseline to week 12 in Urticaria Activity score during a 7 day period (UAS7 [b], range 0-42)	
Proportion of patients with Urticaria Activity Score during a 7-Day Period ≤ 6 (UAS7 [b] ≤ 6) at week 12	
Proportion of patients with Urticaria Activity Score during a 7-Day Period = 0 (UAS7 [b] = 0) at week 12 [c]	
Changes from baseline in the weekly number of hives score at week 12	
Change from baseline to week 12 in overall Dermatology Life Quality Index (DLQI)	
Proportion of patients with angioedema-free days from week 4 to week 12 [d]	

[a] *MID: Minimally Important Difference*

[b] *UAS7: Composite of itch severity and number of hives measured daily and totalled over one week*

[c] Post hoc analysis for study Q4882g

[d] Mean proportion of angioedema-free days from week 4 to week 12 was calculated for the entire study population, including patients asymptomatic for angioedema.

In studies Q4881g and Q4882g the 75 mg dose did not consistently meet either the primary efficacy endpoint or a number of secondary endpoints. It was deemed not efficacious and therefore not further presented.

Change from baseline to week 12 in weekly itch severity score

The primary efficacy endpoint, change from baseline to week 12 in weekly itch severity score was met by both the 150 mg and 300 mg doses in studies Q4881g and Q4882g and by the 300 mg dose in Q4883g (see Table 13).

Table 13: Change from baseline to week 12 in weekly itch severity score, Studies Q4881g, Q4882g and Q4883g (mITT population*)

	Placebo	Omalizumab 150 mg	Omalizumab 300 mg
Study Q4881g			
N	80	80	81
Mean (SD)	-3.63 (5.22)	-6.66 (6.28)	-9.40 (5.73)
Difference in LS means vs. placebo[1]	-	-2.95	-5.80
95% CI for difference	-	−4.72,−1.18	−7.49,−4.10
P-value vs. placebo[2]	-	0.0012	<0.0001
Study Q4882g			
N	79	82	79
Mean (SD)	-5.14 (5.58)	-8.14 (6.44)	-9.77 (5.95)
Difference in LS means vs. placebo[1]	-	-3.04	-4.81
95% CI for difference	-	−4.85,−1.24	−6.49,−3.13
P-value vs. placebo[2]	-	0.0011	<0.0001
Study Q4883g			
n	83	-	252
Mean (SD)	-4.01 (5.87)	-	-8.55 (6.01)
Difference in LS means vs. placebo[1]	-	-	-4.52
95% CI for difference	-	-	−5.97, −3.08
P-value vs. placebo[2]	-	-	<0.0001

**Modified intent-to-treat (mITT) population: Included all patients who were randomized and received at least one dose of study medication.*

BOCF (Baseline Observation Carried Forward) was used to impute missing data.

[1] The LS mean was estimated using an ANCOVA model. The strata were baseline weekly itch severity score (< 13 vs. ≥13) and baseline weight (< 80 kg vs. ≥ 80 kg).

[2] p-value is derived from ANCOVA t-test

Figure 2 shows the mean weekly itch severity score over time in study Q4881g. The mean weekly itch severity scores significantly decreased in both treatment groups with a maximum effect around week 12 that was sustained over the 24-week treatment period. In studies Q4883g (300 mg over the 24-

week treatment period) and Q4882g (150 mg and 300 mg over the 12-week treatment period) the results were similar to those of study Q4881g.

In all three studies (see Figure 12 for study Q4881g), the mean weekly itch severity score for both doses increased gradually during the 16-week treatment-free follow-up period, consistent with symptom re-occurrence. Mean values at the end of the follow-up period were similar to the placebo group, but lower than respective mean baseline values.

Figure 2 **Mean weekly itch severity score over time, Study Q4881g (BOCF, mITT population)**

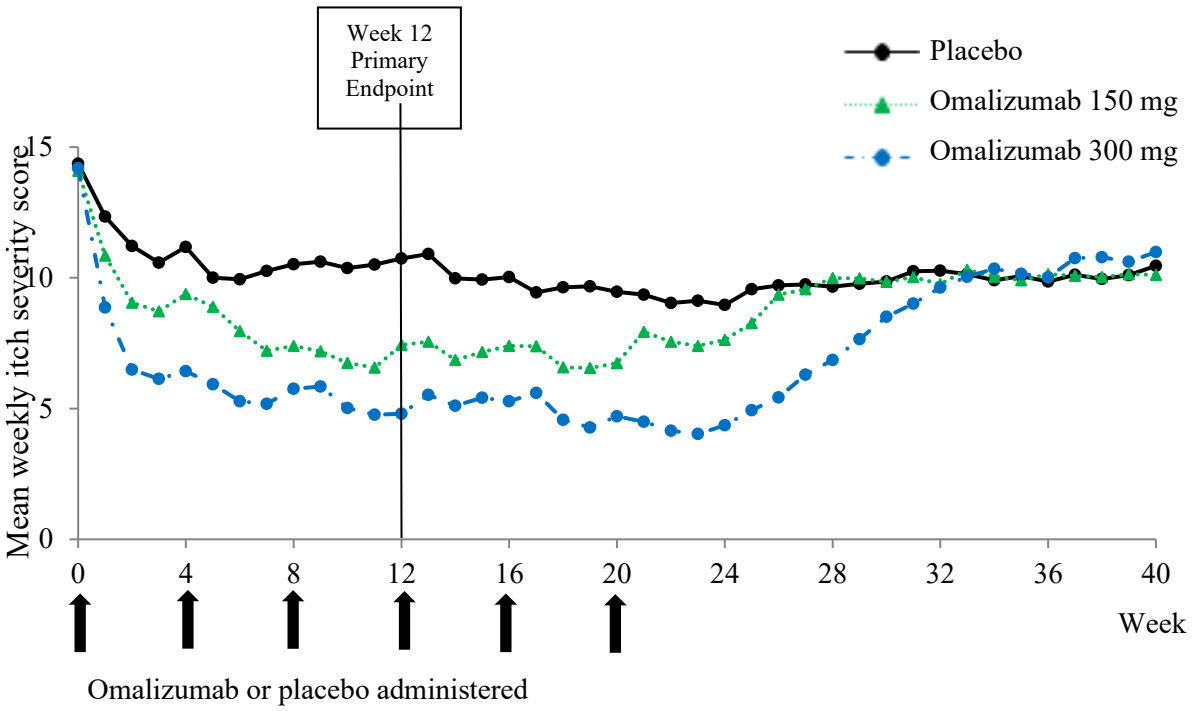

BOCF=baseline observation carried forward; mITT=modified intention-to-treat population

Secondary endpoints for studies **Q4881g**, **Q4882g** and **Q4883g** are presented in Table 14.

Table 14: **Secondary efficacy endpoints in Studies Q4881g, Q4882g and Q4883g (mITT population*)**

	Placebo	Omalizumab 150 mg	Omalizumab 300 mg
Time to MID response in weekly ISS up to week 12 (median weeks)			
Q4881g	4	2 (p=0.0301)	1 (p<0.0001)
Q4882g	4	2 (p=0.0101)	1 (p<0.0001)
Q4883g	5	NA	2 (p<0.0001)
Change from baseline to week 12 in UAS7 (mean)			

	Placebo	Omalizumab 150 mg	Omalizumab 300 mg
Q4881g	-8.01	-14.44 (p = 0.0008)	-20.75 (p<0.0001)
Q4882g	-10.36	-17.89 (p = 0.0001)	-21.74 (p<0.0001)
Q4883g	-8.50	NA	-19.01 (p<0.0001)
Changes from baseline in the weekly number of hives score at week 12 (mean)			
Q4881g	-4.37	-7.78 (p=0.0017)	-11.35 (p<0.0001)
Q4882g	-5.22	-9.75 (p<0.0001)	-11.97 (p<0.0001)
Q4883g	-4.49	NA	-10.46 (p<0.0001)
Change from baseline to week 12 in overall Dermatology Life Quality Index (DLQI) (mean)			
Q4881g	-6.13	-8.00 (p=0.2286)	-10.29 (p<0.0001)
Q4882g	-6.09	-8.29 (p=0.0215)	-10.15 (p=0.0004)
Q4883g	-5.11	NA	-9.69 (p<0.0001)
Proportion of angioedema-free days from week 4 to week 12 (mean)			
Q4881g	88.2%	89.6% (p=0.1747)	96.1% (p<0.0001)
Q4882g	89.2%	91.6% (p=0.0905)	95.5% (p<0.0001)
Q4883g	88.1%	NA	91.0% (p<0.0006)
Proportion of patients with UAS7 ≤ 6 at week 12 (% patients)			
Q4881g	11.3	40.0 (p<0.0001)	51.9 (p<0.0001)
Q4882g	19.0	42.7 (p=0.0010)	65.8 (p<0.0001)
Q4883g	12.0	NA	52.4 (p<0.0001)
Proportion of patients with UAS7 = 0 at week 12 (% patients)			
Q4881g	8.8	15.0 (p=0.2087)	35.8 (p<0.0001)
Q4882g	5.1	22.0 (p=0.0019)	44.3 (p<0.0001)
Q4883g	4.8	NA	33.7 (p<0.0001)

**Modified intent-to-treat (mITT) population: included all patients who were randomised and received at least one dose of study medication*

p-value was derived using Cox proportional hazard model, ANCOVA, stratified Wilcoxon, and stratified CMH, as appropriate, comparing between active treatment and placebo

NA: Not applicable.

BOCF: Baseline Observation Carried Forward

Figure 3 shows mean UAS7 over time in study Q4881g, displaying a significant decrease from baseline in both treatment groups with a maximum effect around week 12. The magnitude of the effect was maintained during the 24-week treatment period. In studies Q4882g (150 mg and 300 mg over the 12-week treatment period) and Q4883g (300 mg over 24-week treatment period) the results were similar to those of study Q4881g.

In all three studies (see Figure 3 for study Q4881g), the UAS7 for both omalizumab treatment groups increased gradually during the 16-week treatment-free follow-up period, consistent with symptom re occurrence. Mean values at the end of the follow-up period were similar to the placebo group but lower than respective mean baseline values.

Figure 3 **Mean UAS7 over time, Study Q4881g (BOCF, mITT population)**

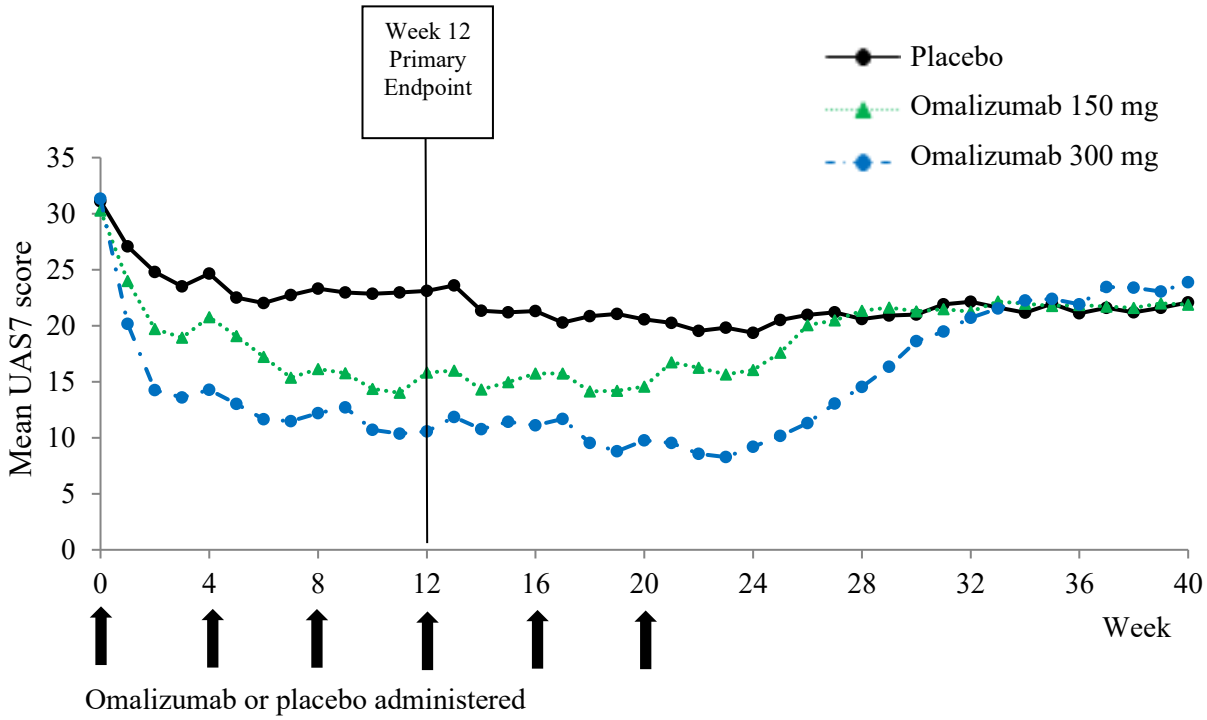

BOCF=baseline observation carried forward; mITT=modified intention-to-treat population; UAS7= urticaria activity score over 7 days

Efficacy after 24 weeks of treatment

Table 15 shows the results after 24 weeks of treatment. Similar magnitudes of response are seen as at 12 weeks.

Table 15: Efficacy results after 24 weeks of treatment, Studies Q4881g and Q4883g (mITT population*)

Parameter Study	Week	Placebo	Omalizumab 150 mg	Omalizumab 300 mg
Change from baseline in weekly itch severity score (BOCF), mean				
Study Q4881g	Week 24	−5.41	−6.47	−9.84**
Study Q4883g	Week 24	−4.03	NA	−8.60**
Change from baseline in UAS7 (BOCF), mean				
Study Q4881g	Week 24	−11.73	−14.21	−22.11**
Study Q4883g	Week 24	−8.85	NA	−19.15**
Proportion of patients with UAS7 ≤ 6, % patients				
Study Q4881g	Week 24	25.0	36.3	61.7**
Study Q4883g	Week 24	16.9	NA	55.6**
Proportion of patients with UAS7 = 0, % patients				
Study Q4881g	Week 24	12.5	20.0	48.1**
Study Q4883g	Week 24	3.6	NA	42.5**

**Modified intent-to-treat (mITT) population: included all patients who were randomised and received at least one dose of study medication*
*** p-value≤0.0001 for the corresponding test statistics between the treatment and the placebo*
NA: Not applicable.
BOCF: Baseline Observation Carried Forward

The treatment duration in the studies were 12 weeks (Q4882g) and 24 weeks, respectively (Q4881g and Q4883g), therefore the Clinical trial experience of long-term treatment beyond 6 months in this indication is limited.

5.2 PHARMACOKINETIC PROPERTIES

General characteristics

Absorption

Administration of Xolair manufactured as a lyophilised or liquid formulation resulted in similar serum concentration-time profiles of omalizumab.

Distribution

In vitro, omalizumab forms complexes of limited size with IgE. The composition and molecular weight of the complexes are dependent on the molar ratio of omalizumab to IgE. Precipitating complexes and complexes larger than 1 million molecular weight were not observed *in vitro*. Complexes formed *in vitro* were similar to those studied *in vivo*. Tissue distribution studies in cynomolgus monkeys showed no specific uptake of 125I-omalizumab by any organ or tissue.

Metabolism

No circulating metabolites were detected after intravenous administration of ^{125}I-omalizumab to cynomolgus monkeys.

Excretion

Since omalizumab is a recombinant humanised IgG_1, its mechanism of clearance from the serum involves IgG clearance processes as well as clearance via specific binding and complex formation with its target ligand, free serum IgE. In studies in mice and monkeys, the omalizumab:IgE complexes were eliminated by interactions with $Fc\gamma$ receptors within the liver and the reticuloendothelial system, at rates which were generally faster than IgG clearance.

Patients with Allergic Asthma and seasonal allergic rhinitis patients

Absorption:

Following single, subcutaneous bolus administration, omalizumab is absorbed slowly, reaching mean peak serum concentrations after 6 to 10 days. Although not precisely defined, the mean absolute bioavailability after subcutaneous administration in humans is estimated to be approximately 53 - 71%.

Distribution:

Distribution volumes were 110 ± 14 mL/kg and typical of distribution volumes seen with large macromolecules.

Elimination:

Omalizumab has a long serum half-life (mean 22 ± 8.2 days). The long half-life is characteristic of IgG class immunoglobulins and a result of IgG recycling via its salvage receptor (FcRn). At the doses recommended for therapeutic use, average clearance is expected to represent dominantly IgG clearance and to be relatively slow (2.27-4.12 mL/kg/day).

Age, Gender, Race

There are no clinically important differences in pharmacokinetic and pharmacodynamic data within the 6-75 age range or by gender or race.

Patients with Chronic rhinosinusitis with nasal polyps (CRSwNP)

The population pharmacokinetics analyses of omalizumab suggested that pharmacokinetics of omalizumab in CRSwNP were consistent with that in asthma. Graphical covariate analyses were performed to evaluate the effects of demographic characteristics and other factors on omalizumab exposure and clinical responses. These analyses demonstrate that no dose adjustments are necessary for age (18 to 75 years) or gender. Race and ethnicity data are too limited in CRSwNP to inform dose adjustment.

Patients with Chronic Spontaneous Urticaria (CSU)

Absorption

Following a single subcutaneous dose in adult and adolescent patients with CSU, omalizumab was absorbed slowly, reaching peak serum concentrations after an average of 6 to 8 days.

In patients with CSU, omalizumab exhibited linear pharmacokinetics across the dose range of 75 mg to 600 mg given as a single subcutaneous dose. Following doses of 75 mg, 150 mg or 300 mg every 4 weeks, trough serum concentrations of omalizumab increased proportionally with the dose level.

Distribution

Based on population pharmacokinetic, distribution of omalizumab in CSU patients was similar to that in patients with allergic asthma.

Elimination

In patients with CSU, based on population pharmacokinetic simulations, omalizumab serum elimination half-life at steady state averaged 24 days and apparent clearance at steady state averaged 240 mL/day (corresponding to 3.0 mL/kg/day for an 80 kg patient).

Age, Race/Ethnicity, Gender, Body Weight, Body Mass Index, Baseline IgE, anti-FcεRI autoantibodies, co-medications

The effects of demographic covariates and other factors on omalizumab exposure were evaluated using population pharmacokinetics. In addition, covariate effects were evaluated by analysing the relationship between omalizumab concentrations and clinical responses. These analyses suggest that no dose adjustments are necessary in patients with CSU for age (12 to 75 years), race/ethnicity, gender, body weight, body mass index, baseline IgE, anti-FcεRI autoantibodies or concomitant use of H2 antihistamines or leukotriene receptor antagonists (LTRAs).

Patients with renal and hepatic impairment

There are no pharmacokinetic or pharmacodynamic data in patients with renal or hepatic impairment (see Section 4.4 SPECIAL WARNINGS AND PRECAUTIONS FOR USE).

5.3 PRECLINICAL SAFETY DATA

Genotoxicity

There was no evidence of gene mutations in a bacterial gene mutation assay with omalizumab. The clastogenic potential of omalizumab has not been investigated.

Carcinogenicity

No long-term studies have been performed in animals to evaluate the carcinogenic potential of omalizumab.

6 PHARMACEUTICAL PARTICULARS

6.1 LIST OF EXCIPIENTS

Solution for injection in pre-filled syringe and pre-filled pen

arginine hydrochloride, histidine hydrochloride monohydrate, histidine, polysorbate 20, water for injections.

Powder for injection vial with diluent

Xolair® vial: sucrose, histidine, histidine hydrochloride monohydrate, polysorbate 20.

Diluent ampoule: water for injections

6.2 INCOMPATIBILITIES

Solution for injection in pre-filled syringe and pre-filled pen: This medicinal product must not be mixed with other medicinal products.

Powder for injection vial and diluent: Xolair should not be mixed with any other medicinal product or diluent other than water for injections.

6.3 SHELF LIFE

In Australia, information on the shelf life can be found on the public summary of the Australian Register of Therapeutic Goods (ARTG). The expiry date can be found on the packaging.

6.4 SPECIAL PRECAUTIONS FOR STORAGE

Solution for injection in pre-filled syringe and pre-filled pen: Store at 2°C to 8°C. Do not freeze. Store in the original package and protect from light. The product may be kept for a total of 48 hours at 25°C.

Powder for injection vial and diluent: Store at 2°C to 8°C. Do not freeze. Store in the original package.

If not used immediately after reconstitution, in-use storage times and conditions prior to use should not be longer than 8 hours at 2° to 8°C or 2 hours below 25°C.

6.5 NATURE AND CONTENTS OF CONTAINER

Solution for injection in pre-filled syringe:

Pre-filled syringe comprising a type I glass syringe barrel with 26G staked needle (stainless steel), rubber plunger stopper, and rigid needle shield composed of a rubber needle shield covered by a rigid

shell. Each pre-filled syringe is mounted with a plastic UltraSafe Passive™ safety device (needle guard) to prevent needle stick injury.

- Each pre-filled syringe of 0.5 mL contains 75 mg of omalizumab.
- Each pre-filled syringe of 1 mL contains 150 mg of omalizumab.

Available as a single packaged pre-filled syringe and in multipacks containing either 4 or 10 individually packaged pre-filled syringes.

Solution for injection in pre-filled syringe, with new safety device:

Pre-filled syringe comprising a type I glass syringe barrel with 27G staked needle (stainless steel), rubber plunger stopper, and rigid needle shield composed of a rubber needle shield covered by a rigid shell. Each pre-filled syringe is mounted with a plastic UltraSafe Plus™ safety device (needle guard) to prevent needle stick injury.

- Each pre-filled syringe of 0.5 mL contains 75 mg of omalizumab.
- Each pre-filled syringe of 1 mL contains 150 mg of omalizumab.
- Each pre-filled syringe of 2 mL contains 300 mg of omalizumab.

The pre-filled syringe is packed in a plastic blister tray sealed with a lidding foil and packed into a protective tamper-evident cardboard box with an information leaflet.

Solution for injection in pre-filled pen:

Pre-filled pen comprising a type I glass syringe barrel with 27G staked needle (stainless steel), rubber plunger stopper, and rigid needle shield composed of a rubber needle shield covered by a rigid shell.

- Each pre-filled pen of 0.5 mL contains 75 mg of omalizumab.
- Each pre-filled pen of 1 mL contains 150 mg of omalizumab.
- Each pre-filled pen of 2 mL contains 300 mg of omalizumab.

The pre-filled pen is packed in a protective cardboard box with a tamper-evident feature including an information leaflet.

Powder for injection vial and diluent:

Xolair is supplied as a pack containing 1 single-use vial of either 75 mg or 150 mg sterile, lyophilised powder and 1 ampoule of water for injections for use as diluent.

Upon reconstitution, both Xolair 75 mg and 150 mg contain 150 mg omalizumab per 1.2 mL (125 mg/mL of omalizumab).

Not all pack sizes and presentations may be marketed.

6.6 SPECIAL PRECAUTIONS FOR DISPOSAL

Dispose the used syringe immediately in a sharps container (closable, puncture resistant container). For the safety and health of you and others, needles and used syringes **must never** be re-used.

In Australia, any unused medicine or waste material should be disposed of in accordance with local requirements.

6.7 PHYSICOCHEMICAL PROPERTIES

Chemical structure

Not applicable

CAS number

0242138-07-4

7 MEDICINE SCHEDULE (POISONS STANDARD)

Schedule 4 – Prescription Only

8 SPONSOR

Novartis Pharmaceuticals Australia Pty Limited
ABN 18 004 244 160
Level 25, Victoria Cross Tower
155 Miller Street
North Sydney NSW 2060
Telephone: 1 800 671 203
Website: www.novartis.com.au
®= Registered Trademark

9 DATE OF FIRST APPROVAL

13 June 2003

10 DATE OF REVISION

29 October 2026

SUMMARY TABLE OF CHANGES

Section Changed	Summary of new information
8	Update to Sponsor Address and contact information.

Internal Document Code
Xol291026i based on the CDSv4.1 dated 26 Oct 2022.

INSTRUCTIONS FOR USE

XOLAIR pre-filled syringe (pre-filled syringe with 26-gauge staked needle)

omalizumab

Read ALL the way through these instructions before injecting. If your doctor decides that you or a caregiver may be able to give your injections of Xolair at home, you need to be trained by your doctor, nurse or pharmacist before you inject yourself or others. Children (6 to less than 12 years of age) are not expected to inject Xolair themselves, however, if deemed appropriate by their doctor, a caregiver may give them their Xolair injection after proper training. The box contains a Xolair pre-filled syringe individually sealed in a plastic tray.

Xolair pre-filled syringe is available in two strengths, 75 mg and 150 mg. You may receive one or both strengths from the pharmacy.

Your Xolair 75 mg pre-filled syringe (pre-filled syringe with 26-gauge staked needle)

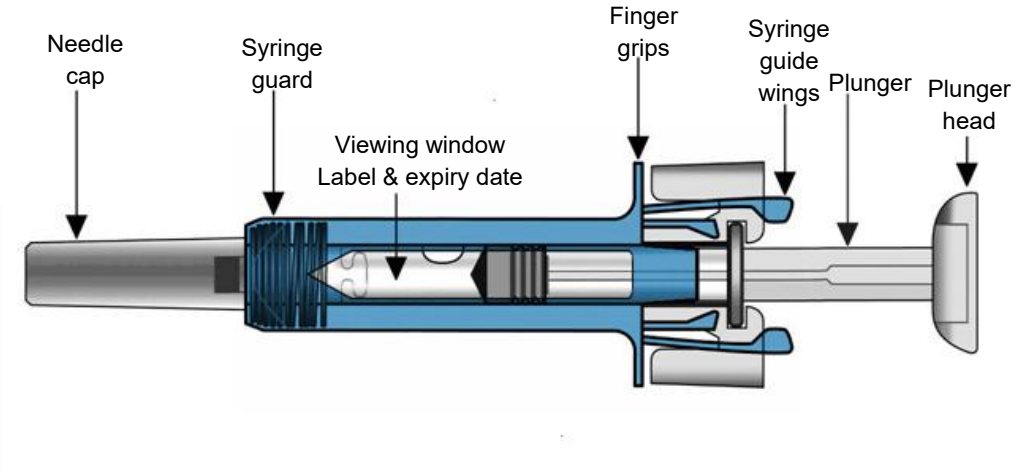

Your Xolair 150 mg pre-filled syringe

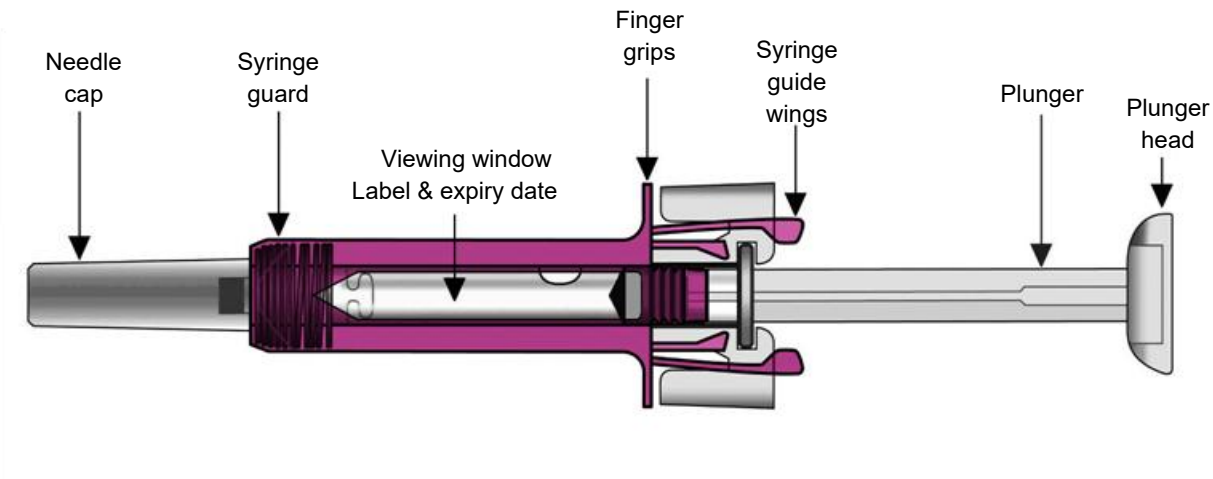

After the medicine has been injected the syringe guard will be activated to cover the needle. This is intended to protect against accidental needle stick injuries.

Other items you need for your injection:

- Alcohol swab.
- Cotton ball or gauze.
- Sharps disposal container.
- Adhesive plaster



Important safety information

Caution: Keep the syringe out of the sight and reach of children.

- The needle cap of the syringe may contain dry rubber (latex), which should not be handled by anyone who is sensitive to this substance.
- Do not open the sealed outer box until you are ready to use this medicine.
- Do not use this medicine if either the seal on the outer box or the seal of the plastic tray is broken, as it may not be safe for you to use.
- Do not use if the syringe has been dropped onto a hard surface or dropped after removing the needle cap.
- Never leave the syringe where others might tamper with it.
- Do not shake the syringe.
- Be careful not to touch the syringe guard wings before use. If the wings are touched, the syringe guard may be activated too early.
- Do not remove the needle cap until just before you give the injection.
- The syringe cannot be re-used. Dispose of the used syringe immediately after use in a sharps container.

Storage of the Xolair pre-filled syringe

- Store this medicine sealed in its outer box to protect it from light. Store in the refrigerator between 2°C and 8°C. DO NOT FREEZE.
- Prior to use, allow the syringe to reach room temperature (25°C) before preparing it for injection (it will take about 30 minutes). If necessary, the product may be returned to the refrigerator for later use. The total time that the syringe is kept at room temperature must not exceed 48 hours.
- **Do not** try to warm the syringe using an external heat source.
- Do not use the syringe after the expiry date which is stated on the outer box and syringe label. If it has expired, return the entire pack to the pharmacy.

The injection site

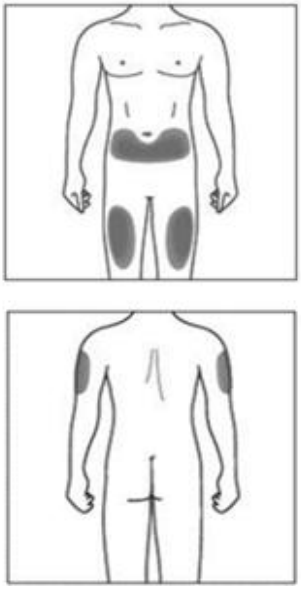

The injection site is the place on the body where you are going to use the syringe.

- The recommended site is the front of the thighs. You may also use the lower abdomen, but **not** the area 5 centimeters around the navel (belly button).
- If you need to give more than one injection for the full dose, choose a different injection site each time you inject.
- If injecting more than once into the same area, ensure a distance of at least 4 cm between injection sites.
- Do not inject into areas where the skin is tender, bruised, red, or hard. Avoid areas with scars or stretch marks.

If a caregiver is giving the injection, the outer upper arms may also be used.

Preparing the Xolair pre-filled syringe for use

Note: Depending on the dose prescribed to you by your doctor, you may need to prepare one or more pre-filled syringes, and inject the contents of them all.

The following table give EXAMPLES of how many injections of each strength you need for a given dose. Please discuss with your doctor how frequent (4 weekly or 2 weekly) you need to administer each dose.

Dose	Syringes needed for the dose			
75 mg	1 blue (75 mg)			
150 mg			1 purple (150 mg)	
225 mg	1 blue (75 mg)	+	1 purple (150 mg)	
300 mg			2 purple (150 mg)	
375 mg	1 blue (75 mg)	+	2 purple (150 mg)	
450 mg			3 purple (150 mg)	
525 mg	1 blue (75 mg)	+	3 purple (150 mg)	
600 mg			4 purple (150 mg)	

1. Take the box containing the syringe out of the refrigerator and leave it **unopened** for about 30 minutes so that it reaches room temperature (leave the syringe in the box to protect it from light).
2. When you are ready to use the syringe, wash your hands thoroughly with soap and water.
3. Clean the injection site with an alcohol swab.
4. Remove the plastic tray from the box and peel back the paper cover. Gripping the middle of the syringe guard, lift the syringe out of the tray.
5. Inspect the syringe. The liquid should be clear to slightly cloudy. Its colour may vary from colourless to pale brownish-yellow. You may see an air bubble, which is normal. DO NOT USE if the syringe is broken or if the liquid looks distinctly cloudy or distinctly brown, or contains particles. In all these cases, return the entire pack to the pharmacy.
6. Holding the syringe horizontally, look into the viewing window to check the expiry date printed on the label. (Note: It is possible to rotate the inner part of the syringe assembly so that the label can be read in the viewing window. DO NOT USE if the product has expired. If expired, return the entire pack to the pharmacy.)

How to use the Xolair pre-filled syringe

1

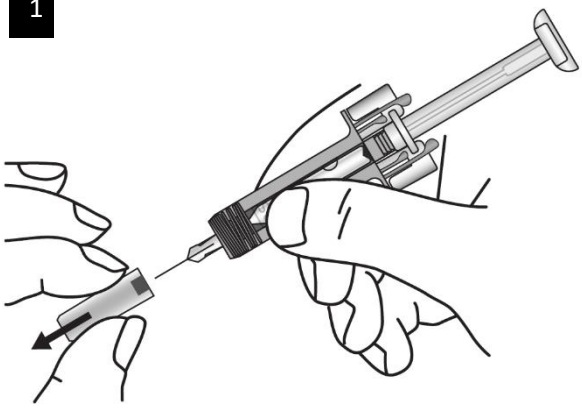

Carefully remove the needle cap from the syringe. Discard the needle cap. You may see a drop of liquid at the end of the needle. This is normal.

2



Gently pinch the skin at the injection site and insert the needle as shown. Push the needle all the way in to ensure that the medicine can be fully administered.

3

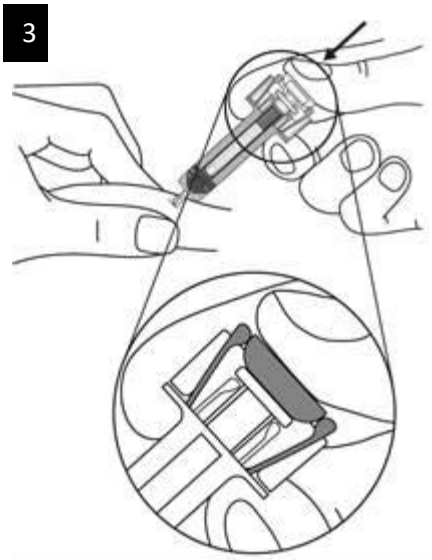

Hold the syringe as shown. **Slowly** depress the plunger **as far as it will go** so that the plunger head is completely between the syringe guard wings.

4



Keep the plunger fully depressed while you carefully lift the needle straight out from the injection site.

5



Slowly release the plunger and allow the syringe guard to automatically cover the exposed needle.

There may be a small amount of blood at the injection site. You can press a cotton ball or gauze over the injection site and hold it for 30 seconds. Do not rub the injection site. You may cover the injection site with a small adhesive bandage, if needed.

Disposal instructions



Dispose of the used syringe immediately in a sharps container (closable, puncture resistant container). For the safety and health of you and others, needles and used syringes **must never** be re-used. Any unused medicinal product or waste material should be disposed of in accordance with local requirements. Do not throw away any medicines via wastewater or household waste. Ask your pharmacist how to throw away medicines you no longer use. These measures will help protect the environment.

INSTRUCTIONS FOR USE

XOLAIR pre-filled syringe (pre-filled syringe with 27-gauge staked needle)

omalizumab

This “Instructions for Use” contains information on how to inject Xolair.

If your doctor decides that you or your caregiver may be able to give your injections of Xolair at home, ensure that your doctor or nurse shows you or your caregiver how to prepare and inject with the Xolair pre-filled syringe before you use it for the first time.

Children below 12 years of age are not expected to inject Xolair themselves, however, if deemed appropriate by their doctor, a caregiver may give them their Xolair injections after proper training.

Be sure that you read and understand this “Instructions for Use” before injecting with the Xolair pre-filled syringe. Talk to your doctor if you have any questions.

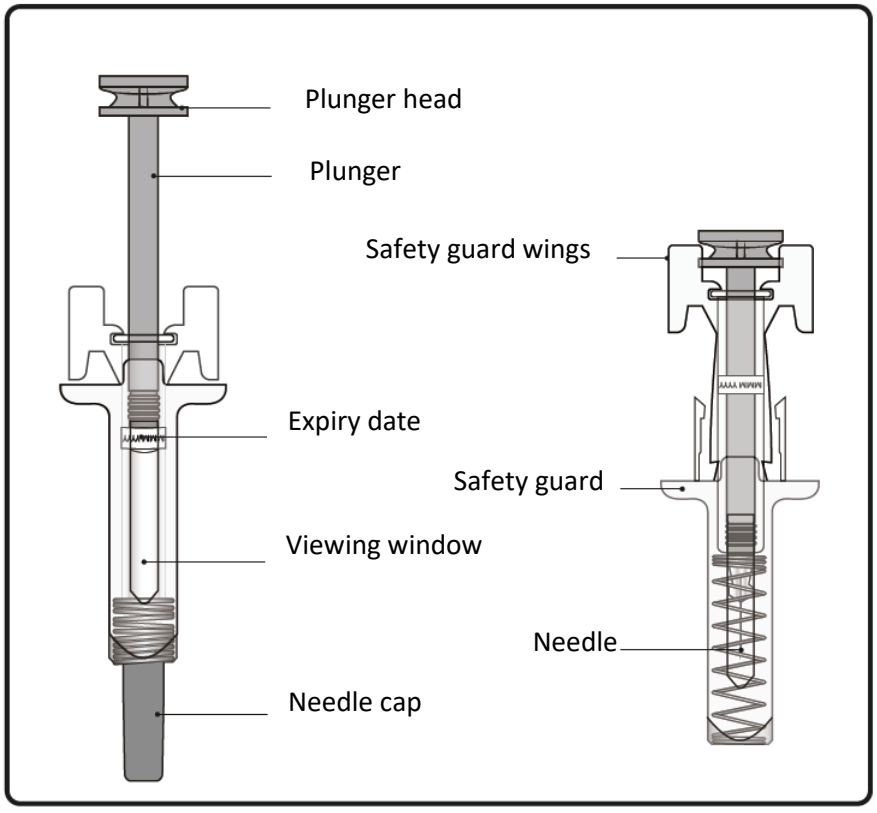

Important information you need to know before injecting Xolair

- Xolair is for subcutaneous injection only (inject directly into fatty layer under the skin).
- **Do not** use the pre-filled syringe if either the seal on the outer carton or the seal of the plastic tray is broken.
- **Do not** use if the pre-filled syringe has been dropped onto a hard surface or dropped after removing the needle cap.
- **Do not** inject if the pre-filled syringe has been kept out of the refrigerator for more than a total of 48 hours. Dispose of it (see Step 12) and use a new pre-filled syringe for your injection.

- The pre-filled syringe has a safety guard that will be activated to cover the needle after the injection is finished. The safety guard will help to prevent needlestick injuries to anyone who handles the pre-filled syringe after injection.
- **Do not** try to re-use or take apart the pre-filled syringe.
- **Do not** pull back on the plunger.

Store Xolair

- Store in a refrigerator (2°C to 8°C). The carton containing the pre-filled syringe can be stored for a total time of 48 hours at room temperature (25°C) before use. It can be placed back in the refrigerator if necessary.
- **Do not** freeze.
- Keep the pre-filled syringe in the original carton until ready to use in order to protect from light.
- Keep the pre-filled syringe out of sight and reach of children.

Dosing table

Xolair pre-filled syringes are available in 3 dose strengths (one pre-filled syringe in each carton). These instructions are to be used for all 3 dose strengths.

Depending on the dose prescribed to you by your doctor, you may need to select one or more pre-filled syringes, and inject the contents of them all in order to deliver your full dose. The Dosing Table below shows the combination of pre-filled syringes needed to deliver your full dose.



Important: If the dose is for a child under age 12 it is recommended to use only blue (75 mg) and purple (150 mg) pre-filled syringes. Refer to the Dosing Table below for the recommended combination of pre-filled syringes for children under age 12.

Contact your doctor if you have questions on the Dosing Table.

Xolair 75 mg pre-filled syringe with a blue plunger	Xolair 150 mg pre-filled syringe with a purple plunger	Xolair 300 mg pre-filled syringe with a gray plunger
Blue plunger 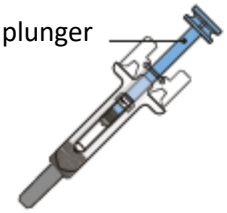	Purple plunger 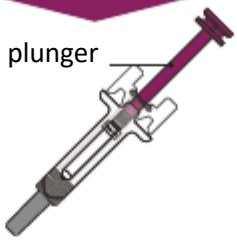	Gray plunger 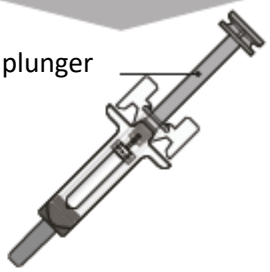

DOSE	Prefilled syringes needed for dose	Blue 75 mg	Purple 150 mg	Gray 300 mg
75 mg	1 blue			
150 mg	1 purple			
225 mg	1 blue + 1 purple			
300 mg (ages 12 and up)	1 gray			
300 mg (children under age 12)	2 purple			
375 mg (ages 12 and up)	1 blue + 1 gray			
375 mg (children under age 12)	1 blue + 2 purple			
450 mg (ages 12 and up)	1 purple + 1 gray			
450 mg (children under age 12)	3 purple			
525 mg (ages 12 and up)	1 blue + 1 purple + 1 gray			
525 mg (children under age 12)	1 blue + 3 purple			
600 mg (ages 12 and up)	2 gray			
600 mg (children under age 12)	4 purple			

Prepare to inject Xolair

Step 1. Bring to room temperature

Take the carton containing the pre-filled syringe out of the refrigerator **and leave it unopened so that it reaches room temperature (minimum 30 minutes)**.

Note: If you need more than one pre-filled syringe (one pre-filled syringe per carton) to deliver your full dose (see Dosing Table), take all the cartons out of the refrigerator at the same time.

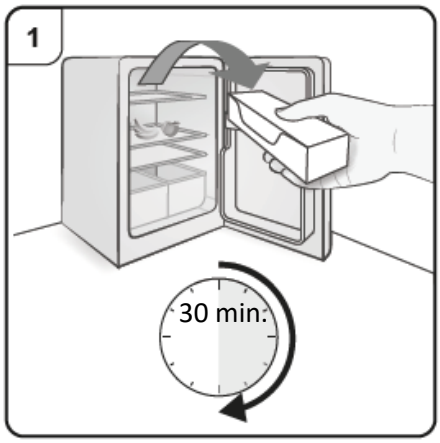

Step 2. Gather supplies

You will need the following supplies (not included in the carton):

- Alcohol wipe
- Cotton ball or gauze pad
- Sharps disposal container
- Adhesive plaster

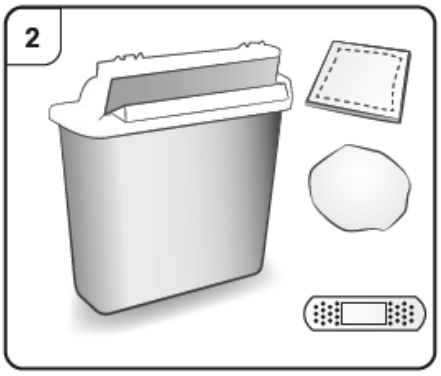

Step 3. Unpack

Open the plastic tray by peeling away the cover. Remove the pre-filled syringe by holding it in the middle as shown.

Do not remove the needle cap until you are ready to inject.

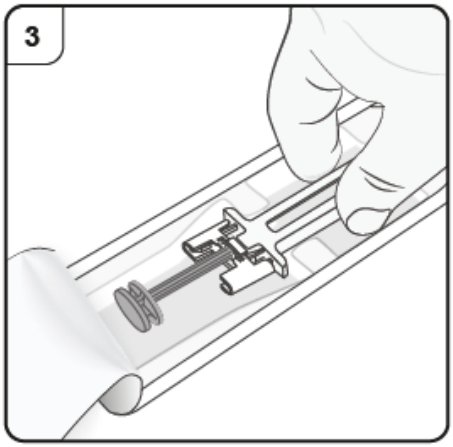

Step 4. Inspect the pre-filled syringe

Look through the viewing window of the pre-filled syringe.

The liquid inside should be clear to slightly cloudy. Its color may vary from colorless to pale brownish-yellow. You may see air bubbles in the liquid, which is normal. **Do not** try to remove the air.

- **Do not** use the pre-filled syringe if the liquid contains particles, or if the liquid looks distinctly cloudy or distinctly brown.
- **Do not** use the pre-filled syringe if it looks damaged or if it has leaked.
- **Do not** use the pre-filled syringe after the expiry date (EXP), which is printed on the pre-filled syringe label and carton.

In all of these cases, contact your doctor, nurse or pharmacist.

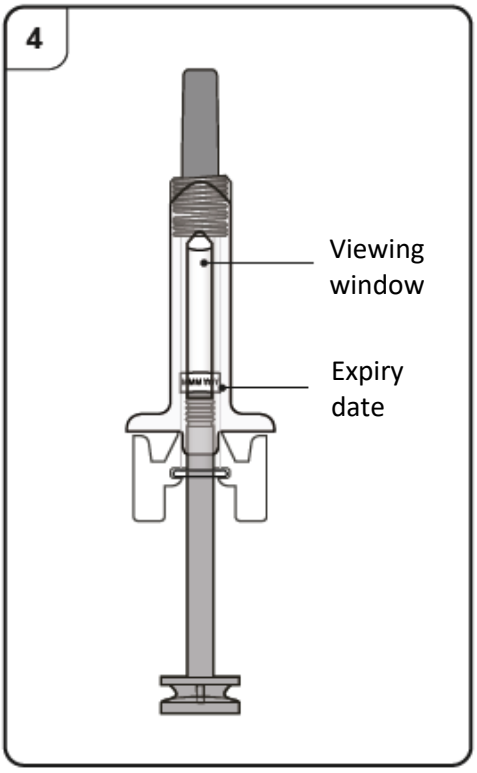

Step 5. Choose injection site

You should inject into the front of the thighs or the lower stomach area but not the area 5 cm around the belly button.

Do not inject into skin that is tender, bruised, red, scaly or hard or into areas with scars or stretch marks.

Note: If you need more than one pre-filled syringe to deliver your full dose, make sure your injections are at least 2 cm apart.

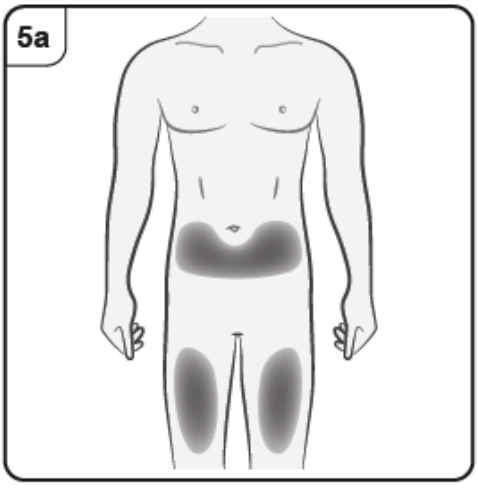

If your caregiver, doctor or nurse is giving you the injection, they may also inject into the outer upper arm.

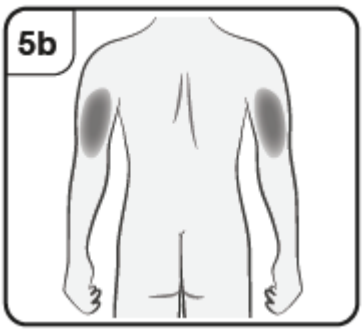

Inject with Xolair

Step 6. Clean injection site

Clean your hands.

Clean the chosen injection site with an alcohol wipe. Leave it to dry before injecting.

Do not touch or blow on the cleaned skin before injecting.

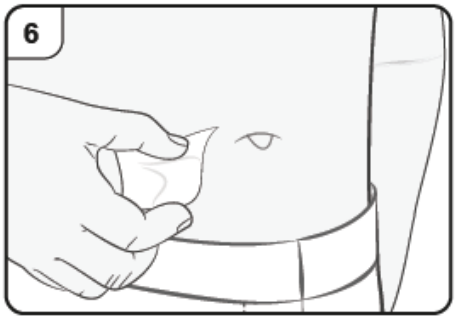

Step 7. Remove needle cap

Firmly pull straight to remove the needle cap from the pre-filled syringe. You may see a drop of liquid at the end of the needle. This is normal.

Do not put the needle cap back on.

Throw away the needle cap.

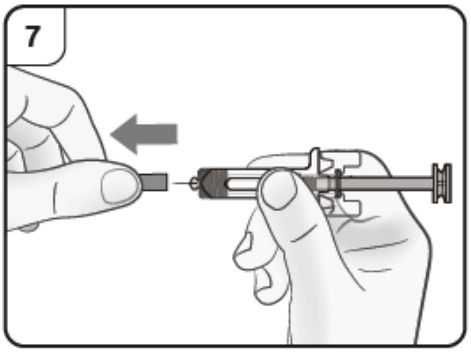

Step 8. Insert needle

Gently pinch the skin at the injection site and hold the pinch throughout the injection. With the other hand insert the needle into the skin at an angle of approximately 45 degrees as shown.

Do not press the plunger while inserting the needle.

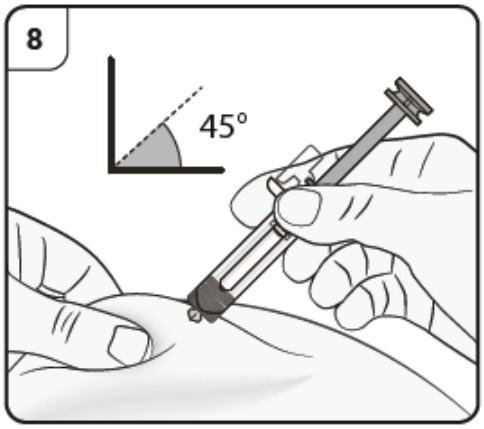

Step 9. Start injection

Continue to pinch the skin. Slowly press the plunger **as far as it will go**. This will ensure that a full dose is injected.

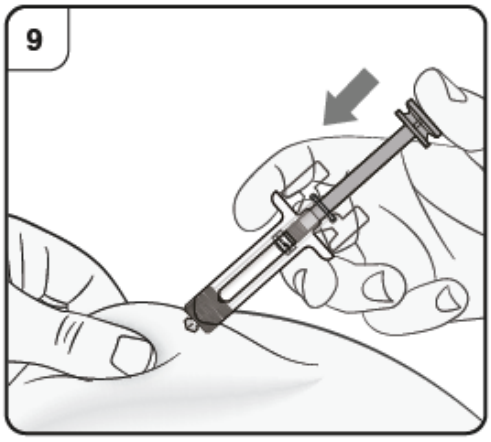

Step 10. Complete injection

Confirm that the plunger head is between the safety guard wings as shown. This will ensure that the safety guard has been activated and will cover the needle after the injection is finished.

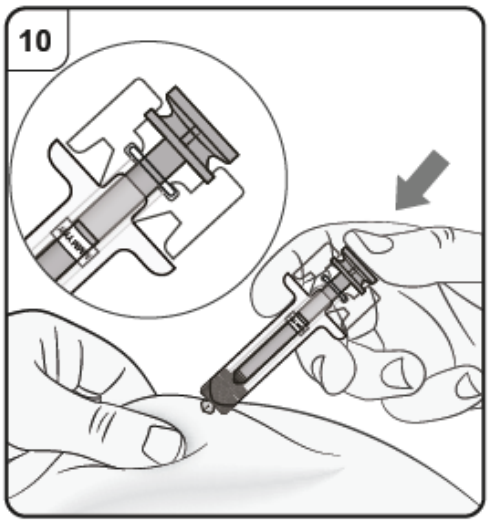

Step 11. Release plunger

Keeping the pre-filled syringe at the injection site, slowly release the plunger until the needle is covered by the safety guard. Remove the pre-filled syringe from the injection site and release the pinch.

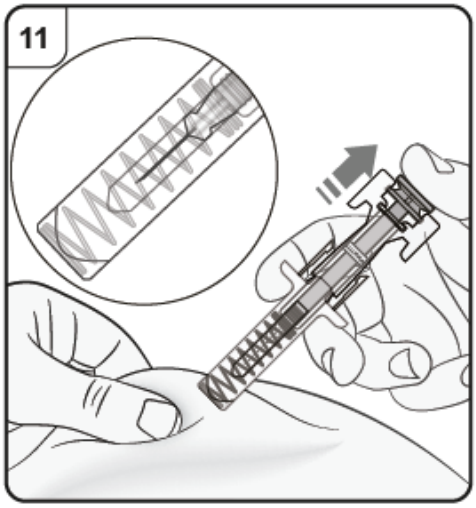

There may be a small amount of blood at the injection site. You can press a cotton ball or gauze pad over the injection site until any bleeding stops. **Do not** rub the injection site. If needed, cover the injection site with a small adhesive plaster.

Note: If you need more than one pre-filled syringe to deliver your full dose, throw away the used pre-filled syringe as described in Step 12.

Repeat Step 2 to Step 12 again for all the pre-filled syringes needed to deliver your full dose.

Carry out the injections immediately one after another.

Make sure the injections are at least 2 cm apart.

After the injection

Step 12. Dispose of the pre-filled syringe

Put the used pre-filled syringe in a sharps disposal container (i.e. a puncture-resistant closable container, or similar) immediately after use.

Do not throw away the pre-filled syringe into household waste.

Do not try to put the needle cap back onto the syringe.

Talk to your doctor or pharmacist about proper disposal of the sharps disposal container. There may be local regulations for disposal.

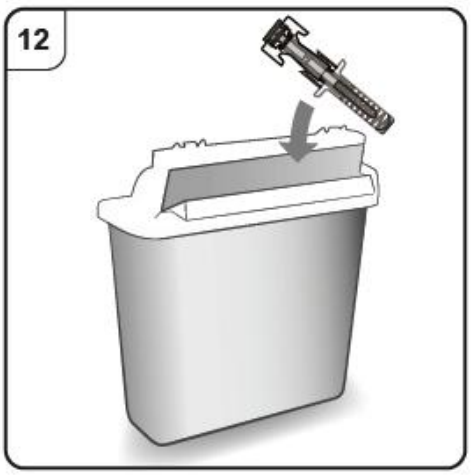

INSTRUCTIONS FOR USE

XOLAIR pre-filled pen

omalizumab

This “Instructions for Use” contains information on how to inject Xolair.

If your doctor decides that you or your caregiver may be able to give your injections of Xolair at home, ensure that your doctor or nurse shows you or your caregiver how to prepare and inject with the Xolair pen before you use it for the first time.

This Xolair pen is intended to be used for patients ages 12 and up.

Be sure that you read and understand this “Instructions for Use” before injecting with the Xolair pen. Talk to your doctor if you have any questions.

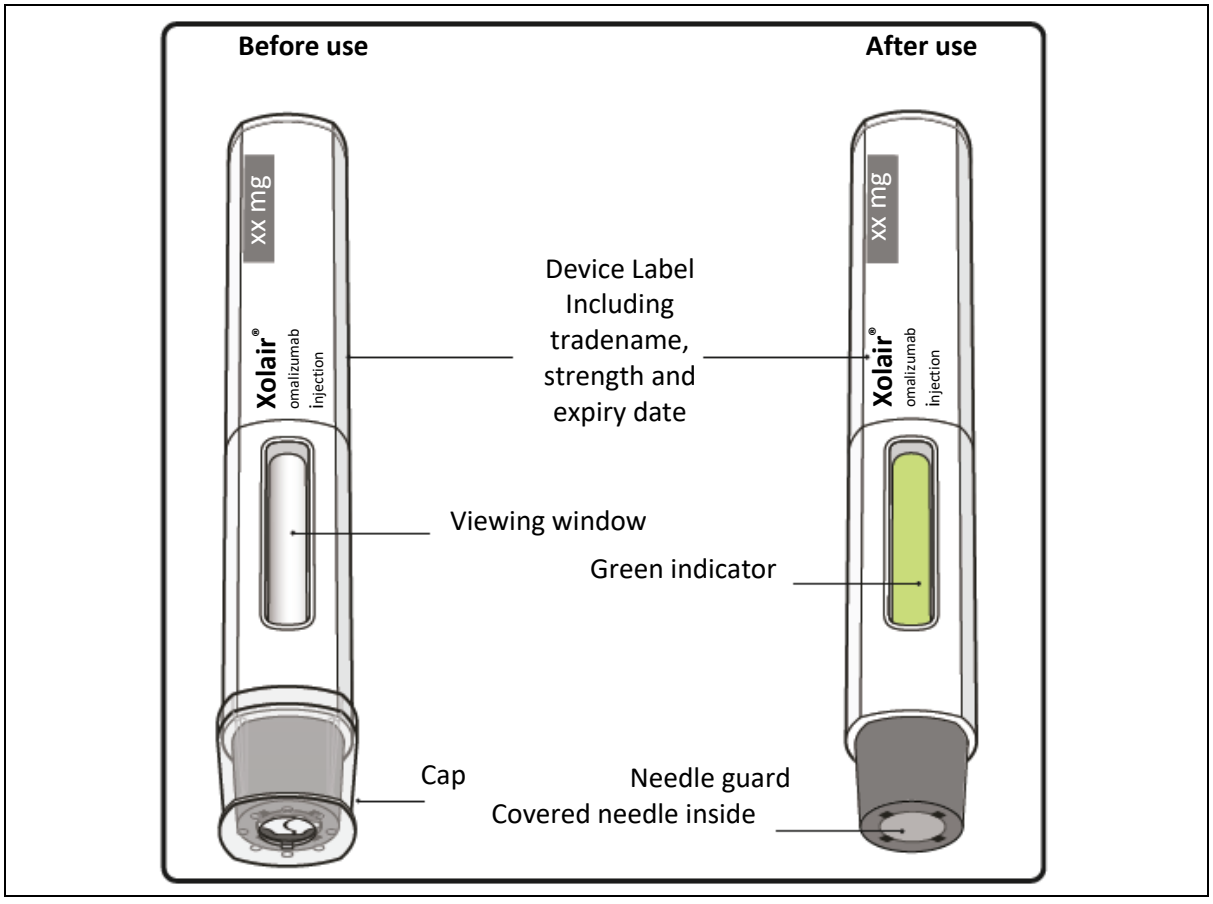

Important information you need to know before injecting Xolair

- Xolair is for subcutaneous injection only (inject directly into fatty layer under the skin).
- **Do not** use the pen if the seal on the outer carton is broken.
- **Do not** use if the pen has been dropped after removing the cap.
- **Do not** inject if the pen has been kept out of the refrigerator for more than a total of 48 hours. Dispose of it (see Step 13) and use a new pen for your injection.

- **Do not** touch or push the needle guard as you could get injured. Touching or pushing on the needle guard could cause a needlestick injury.
- **Do not** try to re-use or take apart the pen.
- **Do not** try to reattach the cap once it has been taken off.

Store Xolair

- Store in a refrigerator (2°C and 8°C). The carton containing the pen can be stored for a total time of 48 hours at room temperature (25°C) before use. It can be placed back in the refrigerator if necessary.
- **Do not** freeze.
- Keep the pen in the original carton until ready to use in order to protect from light.
- Keep the pen out of sight and reach of children.

Dosing table

Xolair pens are available in 3 dose strengths (one pen in each carton). These instructions are to be used for all 3 dose strengths.

Depending on the dose prescribed to you by your doctor you may need to select one or more pens, and inject the contents of them all in order to deliver your full dose. The Dosing Table below shows the combination of pens needed to deliver your full dose.

Contact your doctor if you have questions on the Dosing Table.

Xolair 75 mg pen with a blue needle guard	Xolair 150 mg pen with a purple needle guard	Xolair 300 mg pen with a gray needle guard
Blue needle guard 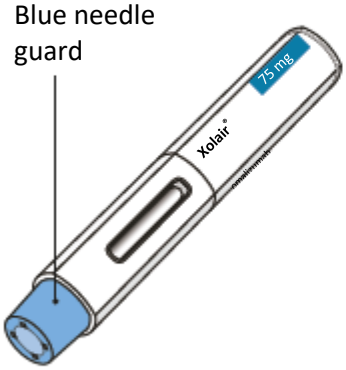	Purple needle guard 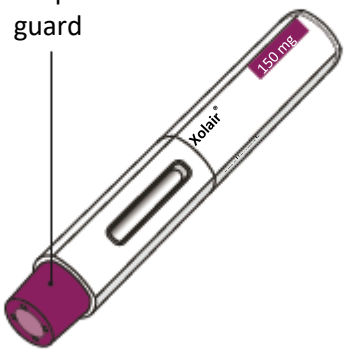	Gray needle guard 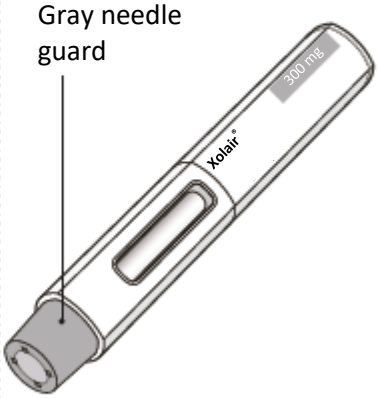

Dose	Number of pens needed for the dose	Blue 75 mg	Purple 150 mg	Gray 300 mg
75 mg	1 blue			
150 mg	1 purple			
225 mg	1 blue + 1 purple			
300 mg	1 gray			
375 mg	1 blue + 1 gray			
450 mg	1 purple + 1 gray			
525 mg	1 blue + 1 purple + 1 gray			
600 mg	1 gray + 1 gray			

Prepare to inject Xolair

Step 1. Bring to room temperature

Take the carton containing the pen out of the refrigerator **and leave it unopened so that it reaches room temperature (minimum 30 minutes)**.

Note: If you need more than one pen (one pen in each carton) to deliver your full dose (see Dosing Table), take all the cartons out of the refrigerator at the same time.

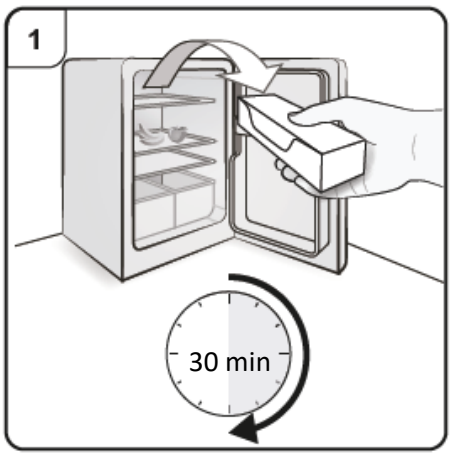

Step 2. Gather supplies

You will need the following supplies (not included in the carton):

- Alcohol wipe
- Cotton ball or gauze pad
- Sharps disposal container
- Adhesive plaster

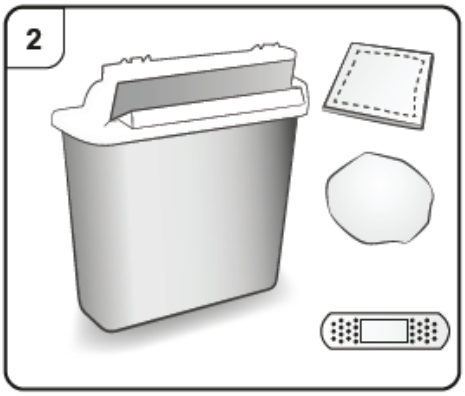

Step 3. Unpack

Take the pen out of the outer carton.

Do not remove the cap until you are ready to inject.

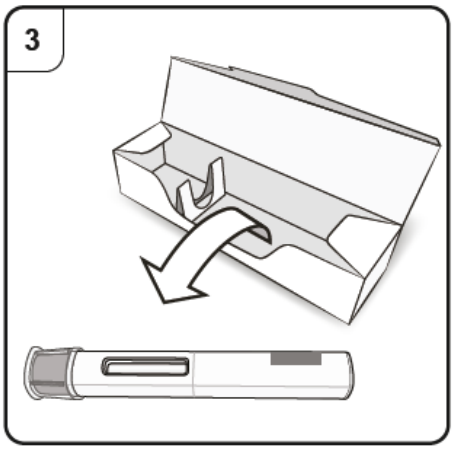

Step 4. Inspect the pen

Look through the viewing window of the pen.

The liquid inside should be clear to slightly cloudy. Its color may vary from colorless to pale brownish-yellow. You may see air bubbles in the liquid, which is normal.

- **Do not** use the pen if the liquid contains particles, or if the liquid looks distinctly cloudy or distinctly brown.
- **Do not** use the pen if it looks damaged.
- **Do not** use the pen after the expiry date (EXP), which is printed on the pen label and carton.

In all of these cases, contact your doctor, nurse or pharmacist.

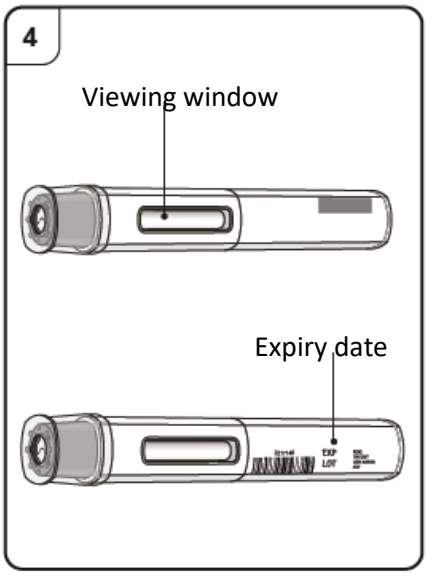

Step 5. Choose injection site

You should inject into the front of the thighs or the lower stomach area but not the area 5 cm around the belly button.

Do not inject into skin that is tender, bruised, red, scaly or hard or into areas with scars or stretch marks.

Note: If you need more than one pen to deliver your full dose, make sure your injections are at least 2 cm apart.

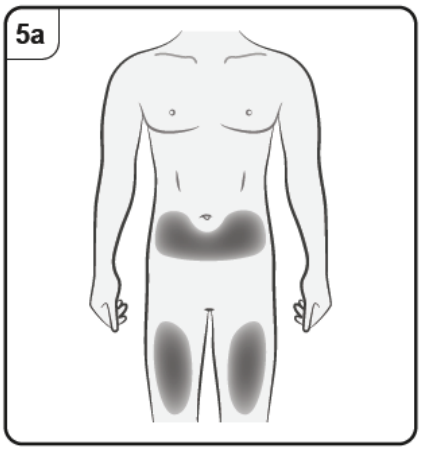

If a caregiver, doctor or nurse is giving the injection, they may also inject into the outer upper arm.

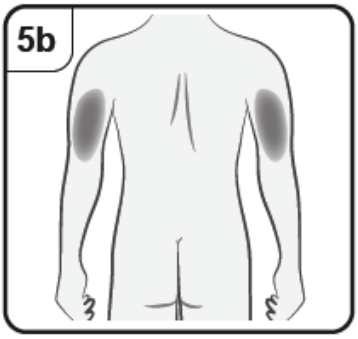

Inject with Xolair

Step 6. Clean injection site

Clean your hands.

Clean the chosen injection site with an alcohol wipe. Leave it to dry before injecting.

Do not touch or blow on the cleaned skin before injecting.

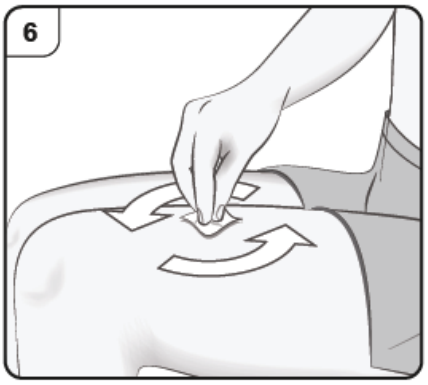

Step 7. Remove cap

Pull the cap straight off in the direction of the arrow.

Do not put the cap back on. Throw away the cap.

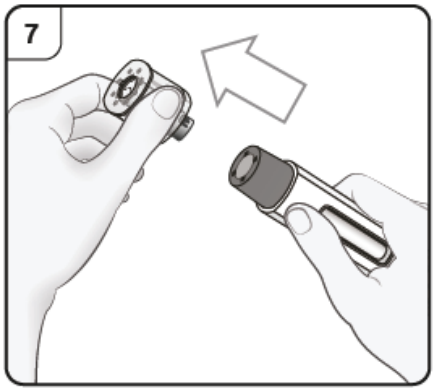

Step 8. Position the pen

Hold the pen comfortably **with the needle guard directly against the skin.**

The pen should be at a 90° angle to the skin as shown.

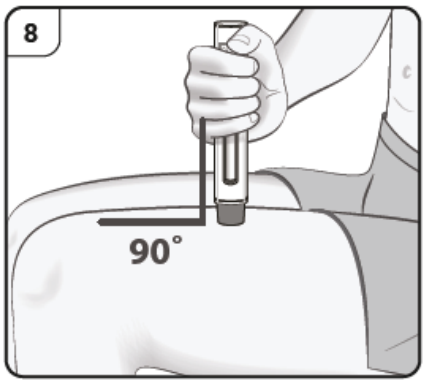

Step 9. Start injection

Push and hold the pen firmly against the skin. Listen for the **1st click** which indicates that the injection has started.

Listen for 'click' sound.

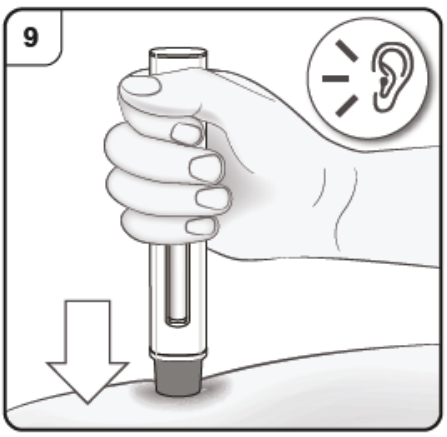

Step 10. Monitor injection

Keep holding the pen firmly down against the skin. The green indicator shows the progress of the injection.

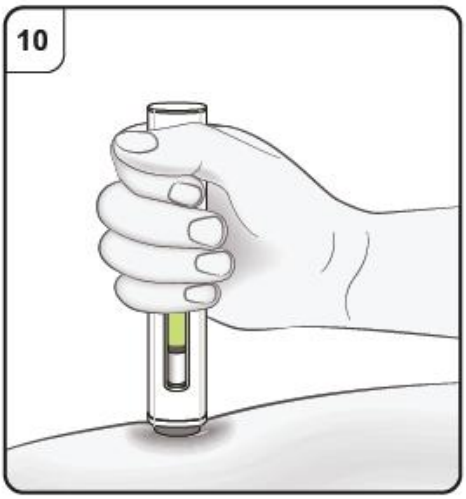

Step 11. Complete injection

Listen for the **2nd click**. This indicates the injection is **almost** complete.

Keep holding the pen in position until the green indicator has stopped moving to make sure the injection is complete. Remove the pen from the skin. The needle is automatically covered by the needle guard. The injection is now complete.

Listen for 'click' sound.

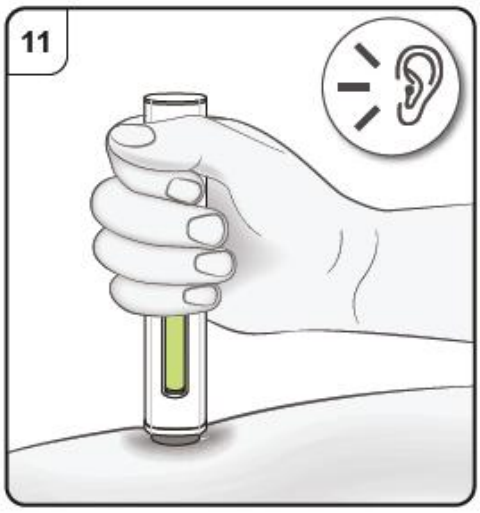

After the injection

Step 12. Check green indicator

If the green indicator has not completely filled the viewing window, contact your doctor or nurse.

There may be a small amount of blood at the injection site.

You can press a cotton ball or gauze pad over the injection site until any bleeding stops.

Do not rub the injection site. If needed, cover your injection site with a small adhesive plaster.

Note: If you need more than one pen to deliver your full dose, throw away the used pen as described in Step 13.

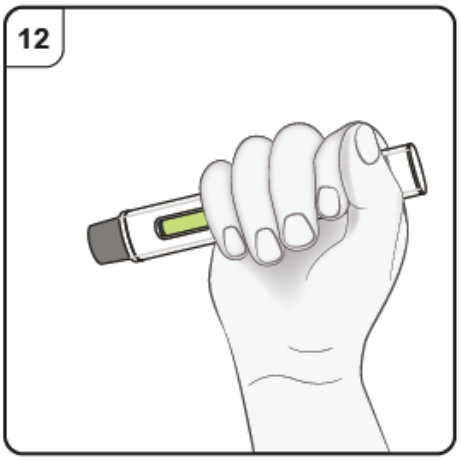

Repeat Step 2 to Step 13 again for all the pens needed to deliver your full dose.

Carry out the injections immediately one after another.

Make sure the injections are at least 2 cm apart.

Step 13. Dispose of the pen

Put the used pen in a sharps disposal container (i.e. a puncture-resistant closable container, or similar) right away after use.

Do not throw away (dispose of) the pen into household waste.

Talk to your doctor or pharmacist about proper disposal of the sharps disposal container. There may be local regulations for disposal.

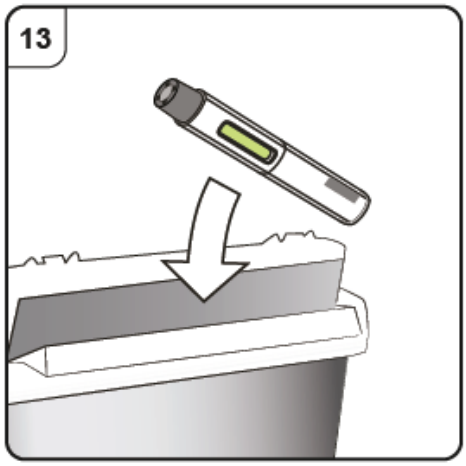

INFORMATION FOR THE HEALTHCARE PROFESSIONAL

XOLAIR powder vial & diluent

The following information is intended for MEDICAL or HEALTHCARE PROFESSIONALS only.

Xolair is for single use in one patient only and contains no antimicrobial agent. To reduce microbiological hazard, the product should be used immediately after reconstitution.

The lyophilized product takes 15 to 20 minutes to dissolve, although in some cases it may take longer. The fully reconstituted product will appear clear to slightly opalescent, colourless to pale brownish-yellow and may have a few small bubbles or foam around the edge of the vial. Because the reconstituted product is somewhat viscous, care must be taken to WITHDRAW ALL OF THE PRODUCT from the vial before expelling any air or excess solution from the syringe in order to obtain the full 1.2mL dose.

To prepare Xolair 150 mg Powder Vials for subcutaneous administration, please adhere to the following instructions:

1. Draw 1.4 mL of water for injections from the ampoule into a 3 mL syringe equipped with a 1 inch, large bore 18-gauge needle.
2. With the vial placed upright on a flat surface, insert the needle and transfer the water for injections into the omalizumab vial using standard aseptic techniques, **directing the water for injections directly onto the powder.**
3. Keeping the vial in the upright position, vigorously swirl the vial (do not shake) for approximately 1 minute to evenly wet the powder.
4. To aid dissolution after completing step 3, gently swirl the vial for 5 to 10 seconds approximately every 5 minutes in order to dissolve any remaining solids.

   Note: The powder typically takes **15 to 20 minutes** to dissolve completely, although it may take longer. If this is the case, repeat step 4 until there are no visible gel-like particles in the solution.

   When the medicinal product is fully dissolved, there should be no visible gel-like particles in the solution. Small bubbles or foam around the edge of the vial are common. The reconstituted medicinal product will appear clear to slightly opalescent, colourless to pale brownish-yellow. Do not use if solid particles are present.
5. Invert the vial for at least 15 seconds in order to allow the solution to drain towards the stopper. Using a new 3 mL syringe equipped with a 1 inch, large bore, 18-gauge needle, insert the needle into the inverted vial. Keeping the vial inverted, position the needle tip at the very bottom of the solution in the vial when drawing the solution into the syringe. Before removing the needle from the vial, pull the plunger all the way back to the end of the syringe barrel in order to **remove all of the solution** from the inverted vial.
6. Replace the 18-gauge needle with a 25-gauge needle for subcutaneous injection.
7. Expel air, large bubbles and any excess solution in order to obtain the required 1.2 mL dose. A thin layer of small bubbles may remain at the top of the solution in the syringe. Because the solution is slightly viscous, the injection may take 5 to 10 seconds to administer the solution by subcutaneous injection.

   The vial delivers 1.2 mL (150 mg) of Xolair.
8. The injections are administered subcutaneously in the deltoid region of the arm, the lower abdomen (but not the area 5 centimeters around the navel) or the thigh.